FPG

فالكون باور العالمية
لأجهزة السلامة

Title

Material Submittal for
Fire Alarm System

Brand

Avenger

AVENGER

Index

- ***Technical Catalogues.***
- ***Avenger Certificates.***
- ***Bill of Materials.***
- ***Data Sheets.***
- ***UL Listed.***
- *FM* ***Approvals.***
- ***Avenger Approvals.***
- *List of Projects.*

Avenger Certifications

SECRETARY OF STATE

STATE OF NEVADA

NEVADA STATE BUSINESS LICENSE

AVENGER SYSTEMS, LLC

Nevada Business Identification # NV20151238133
Expiration Date: 04/30/2027

In accordance with Title 7 of Nevada Revised Statutes, pursuant to proper application duly filed and payment of appropriate prescribed fees, the above named is hereby granted a Nevada State Business License for business activities conducted within the State of Nevada.
Valid until the expiration date listed unless suspended, revoked or cancelled in accordance with the provisions in Nevada Revised Statutes. License is not transferable and is not in lieu of any local business license, permit or registration.
License must be cancelled on or before its expiration date if business activity ceases. Failure to do so will result in late fees or penalties which, by law, cannot be waived.

IN WITNESS WHEREOF, I have hereunto set my hand and affixed the Great Seal of State, at my office on 03/04/2026.

Certificate Number: B202603046530996
You may verify this certificate online at https://www.nvsilverflume.gov/home

FRANCISCO V. AGUILAR
Secretary of State

Certificate of Registration

This is to certify that the Quality Management System of

Avenger Systems LLC

11586 Zagarolo Lane, Las Vegas, NV 89141 USA

is in accordance with the requirements of the following standard

ISO 9001:2015

(Quality Management System)

SCOPE

Manufacturing of Fire Alarm Systems, Wet Chemical Fire Suppression Systems, Clean Agents Fire Suppression System

(IAF Code: 18)

Certificate Number : 211124010108

Initial Registration Date : 21-Nov-2024
1st Surveillance Date : 21-Oct-2025
2nd Surveillance Date : 21-Oct-2026
Certificate Expiry Date : 20-Nov-2027

To verify certificate, visit at :

www.arscert.com
www.uafaccreditation.org
www.iafcertsearch.org

Issued by ARS Assessment Private Limited

Managing Director

CB-MS-3923

UAF Address : 400, North Center Dr, STE 202, Norfolk, VA 23502, United States of America

This certificate remains the property of ARS and must be returned to ARS on Cancellation or Suspension of the certificate Validity of the certificate is subject to successful completion of surveillance audits. Further clarification regarding the scope of this certificate and the applicability of standard may be obtained by consulting the Organisation on info@arscert.com

RELIABLE CERTIFICATION

Certification

Awarded to

AVENGER SYSTEMS LLC

Head Office
11586 Zagarolo Lane, Las Vegas, NV 89141 USA.

Reliable Certification Ltd. certifies that the management system of the above organisation has been audited and found to be in accordance with the requirements of the management standard detailed below

Standard

ISO 14001:2015

ENVIRONMENTAL MANAGEMENT SYSTEM

Scope of Certification
Manufacturing of Fire Alarm Systems, Wet Chemical Fire Suppression Systems & Clean Agents Fire Suppression Systems.

Certificate number:	RCLQ1001400
Initial Certification date:	23-JUL-2025
Recertification date:	22-JUL-2028

Subject to the continued satisfactory operation of the organization's management system

Director

Certification Body: RELIABLE CERTIFICATION LTD.
Address: 412 Allied Sainif House Greenford Rd, London UB6 9AH.
For further information, please contact info@reliablecert.uk
To check the validity of this certificate, please visit: www.reliablecert.uk
Accreditation by UNITED KINGDOM INTERNATIONAL CERTIFYING BOARD (UKICB)
Address: 4 The Ridgeway, Ridgeway Trading Estate, Iver, England, SLO 9HW.
For further clarification regarding accreditation, please visit www.ukicb.co.uk

RELIABLE CERTIFICATION

Certification

Awarded to

AVENGER SYSTEMS LLC

Head Office
11586 Zagarolo Lane, Las Vegas, NV 89141 USA.

Reliable Certification Ltd. certifies that the management system of the above organisation has been audited and found to be in accordance with the requirements of the management standard detailed below

Standard

ISO 45001:2018

HEALTH AND SAFETY MANAGEMENT SYSTEM

Scope of Certification
Manufacturing of Fire Alarm Systems, Wet Chemical Fire Suppression Systems & Clean Agents Fire Suppression Systems.

Certificate number:	RCLQ1001401
Initial Certification date:	23-JUL-2025
Recertification date:	22-JUL-2028

Subject to the continued satisfactory operation of the organization's management system

Director

UKICB CERTIFYING BOARD

ISO 45001:2018

Certification Body: RELIABLE CERTIFICATION LTD.
Address: 412 Allied Sainif House Greenford Rd, London UB6 9AH.
For further information, please contact info@reliablecert.uk
To check the validity of this certificate, please visit: www.reliablecert.uk
Accreditation by UNITED KINGDOM INTERNATIONAL CERTIFYING BOARD (UKICB)
Address: 4 The Ridgeway, Ridgeway Trading Estate, Iver, England, SLO 9HW.
For further clarification regarding accreditation, please visit www.ukicb.co.uk

Bill Of Materials

BILL OF MATERIALS

Model #	Description Detail
OA902H6-10	Oasis, M6, 1 aperture, 12 Loop, 5.25A, Red (Deep Enclosure)
S723	Oasis network module (Ethernet and IFAM)
AS5050-250	Addressable Optical Smoke Detector - 7th Edition
AS5500-450	Addressable Heat Detector
AS5050-350	Addressable Multisensor Smoke & Heat Detector -7th Edition
AS5000-210	Addressable UL Base 4"
AS56000-005	Dual Action Addressable Manual Pull Station
AS56000-006	UL Manual Pull Station Backbox
AS58000-011	Open Area Sounder Beacon - Indoor / Outdoor
AS4705-700	Addressable UL Input Module (OPTIONAL)
AS4705-701	Addressable Relay Module (OPTIONAL)

Datasheets

Product Datasheet

OASIS

2-16 LOOP ANALOG ADDRESSABLE FIRE ALARM CONTROL PANELS

Standard Features

- UL Listed (Tenth Edition)
- Supports Apollo and Hochiki Protocols
- 2 to 8 loop or 2 to 16 loop versions - 127 Devices Per Loop
- 400mA loop current
- 4 programmable NACs Class B or 2 Class A with internal synchronization
- 5.25 A or 10.25 A power supply options
- 3 programmable inputs and 5 programmable relay outputs
- 7 inch, full-color resistive touch screen with intuitive user interface
- Up to 24 programmable soft function keys
- Up to 64 user login accounts
- Hard-wired fire and trouble routing inputs and outputs Modular and expandable electronics
- 400 sub-address points per loop (800 per loop module)
- Option to invert inputs and outputs
- 5000 programmable cause and effects; over 50,000 inputs and outputs
- Can be networked with programmable functionality
- Programming via USB port to PC or memory stick

Product Overview

The all new Oasis product range of fire alarm control equipment combines the very latest hardware and software to produce a control and indication system, which is powerful and sophisticated, yet simple to use and understand. The flexibility of the Oasis platform is such that it can be re-configured to realize many other control and indication applications, with direct integration into intelligent buildings.

Moving away from the simple, price driven competitive model used by most manufacturers today, the Oasis concept is designed to add value to System Designers, Integrators, Service Providers, and end users. Developed from the "ground up" and using some of the most advanced technology available, Oasis is designed as one of the most powerful, intelligent, and technically robust fire alarm products available. Not only do the products and services offered under the Oasis brand provide solutions to the most technically challenging applications in life safety, Oasis will deliver added value, market advantage, and a competitive edge to your business.

Optional Panel Peripherals

- **LatiView Graphics**
  L@tiView enables the creation of a 2D map of any site or building to monitor fire safety and detection, and automatically switches to an area where a fire device has been activated to allow immediate viewing and investigation of an event.

- **Dual Loop Panel Module (S758)**
  The Dual Loop Panel Module monitors loop device status and provides status to the panel processor. It holds device configurations and operates in a standalone manner when catastrophic failures occur.

- **16 Channel I/O Interface Card (S560)**
  The 16 Channel I/O Interface enhances the versatility of the alarm system by providing additional input and output capabilities to the Oasis Fire Alarm Control Panel. Inputs or outputs can be selected for up to 16 individual channels, and are configured in the same way as devices connected to addressable loops of the panel. The 16 Channel I/O Interface can be configured to contribute or act upon cause and effect logic.

- **Media Gateway™ Panel Module (S788)**
  The Media Gateway Panel Module provides connectivity to monitoring centers using IP (Sur-Gard), or dial-up connectivity. The Media Gateway may also be used to meet integration application requirements.

- **8 Channel Relay Panel Module (S791)**
  The 8 Channel Relay Panel Module has 8 voltage-free changeover relay contacts, each of which can be individually programmed. All outputs are configurable in the same way as devices connected to the loops and all may be acted upon by cause and effect logic. These boards are typically used in applications which require more than the five standard relay outputs, such as signaling to other systems or plant control.

- **Network Module (S723)**
  The Network Module provides enhanced high-speed communication for networking fire control panels. The network provided by this module can support combinations of Fire Alarm Control Panels and Vision units. Fire Alarm Control Panels can receive events from other panels in the network. The Class X networking used in conjunction with the Network Module provides tolerance against open and short circuit trouble conditions.

- **Printer (S768)**
  The Printer is an optional feature for printing fire system events as they occur. The printer is located on the fascia, below the Zone LEDs (if present). It is a thermal printer and never requires replacement ink. Printing is performed on heat-sensitive paper rolls. A trouble message is reported when the paper runs out. The printer includes a front-loading feature for replacing paper rolls.

- **Zone LED Module (S771)**
  The Zone LED module contains 48 LEDs and is connected to the LCD Main Processor Board of the Oasis Fire Alarm Control Panel. A maximum of three Zone LED modules can be connected to provide the fascia with 144 Zone LED indicators.

- **4 Channel NAC Panel Module (S793)**
  FUTURE ENHANCEMENT
  Additional NAC output capability can be added to by using 4 Channel NAC Modules. These boards have 4 supervised NAC outputs, each of which can be individually programmed. The circuits can be configured for class A or B operation. These circuits can be configured to act upon cause and effect logic.

- **8 Channel Conventional Zone Panel Module (S792)**
  FUTURE ENHANCEMENT
  The 8 Channel Conventional Zone Panel Module has 8 supervised detection circuits (Class B). Each circuit can support up to 20 conventional detectors and approved devices. Individual circuits may be configured for trigger resistor or short circuit activation. These circuits may be used for any of the standard input actions and can be configured to contribute to cause and effect logic. Each pair of circuits (e.g., 1 and 2, 3 and 4, etc.) can be joined to form a single Class A configuration.

- **16 Channel I/O Interface Panel Module (S772)**
  FUTURE ENHANCEMENT
- The 16 Channel I/O Interface Panel Module will provide the same functionality as the 16 Channel I/O Interface Card, with the convenience of a plug-in module.

Technical Specifications

2 TO 8 LOOP (4 SLOT) ENCLOSURE	
Size	Standard Cabinet: 420mm (W) x 590mm (H) x 153mm (D), or 16.5in (W) x 23.2in (H) x 6in (D) Deep Cabinet: 420mm (W) x 590mm (H) x 203mm (D), or 16.5in (W) x 23.2in (H) x 8in (D)
Construction	Mild sheet steel enclosure, 1.5 mm
Cable Entry	Standard Cabinet: 28 knockouts top, 19 knockouts back, 1 knockout each side, 2 knockouts bottom Deep: 38 knockouts top, 19 knockouts back, 1 knockout each side, 2 knockouts bottom
Optional Semi-Flush Mounting Kit	Semi-Flush Mounting Collar Kit KM5FCRD - Red KM5FCGY - Gray KM5FCBS - Black
Battery Capacity	Standard Cabinet: Up to 28 Ah (Power Sonic PS-12280) Deep Cabinet: Up to 40 Ah (Power Sonic PS-12400)
2 TO 16 LOOP (8 SLOT) ENCLOSURE	
Size	Standard Cabinet: 540mm (W) x 720mm (H) x 160mm (D), or 21.3in (W) x 28.3in (H) x 6.3in (D) Deep Cabinet: 540mm (W) x 720mm (H) x 212mm (D), or 21.3in (W) x 28.3in (H) x 8.3in (D)
Construction	Mild sheet steel enclosure, 1.5 mm
Cable Entry	Standard Cabinet: 38 knockouts top, 25 knockouts back, 2 knockouts each side, 2 knockouts bottom Deep Cabinet: 50 knockouts top, 25 knockouts back, 2 knockouts each side, 2 knockouts bottom
Battery Capacity	Standard Cabinet: Up to 28 Ah (Power Sonic PS-12280) Deep Cabinet: Up to 40 Ah (Power Sonic PS-12400)
ALL MODELS	
Finish	Epoxy powder coated
Enclosure Color	● Red (RAL3002) ● Gray (BS 00 A 05) ● Black (RAL9005)
Power Supply Voltage	115 V AC or 230 V AC
Power supply rating at 24V DC	5.25 A (charges up to 60 Ah) 10.25 A (charges up to 100 Ah)
Display	Full-color 800 x 480 LCD with resistive touch screen and automatic backlight dimming
Software Zones	2000
Software Groups	5000
Cause and Effects	5000
Event Log	10,000 events, 1 second resolution. Filterable and printable
Detection Loops	2 to 16 added 2 at a time (S758 dual loop cards)
Detection Loop Current	400 mA each
AUX 24V Output	2 - each rated at 900 mA
NACs	4 - each rated at 2.5 A Class B or 2 Class A.
Programmable Relay Outputs	5 - 30 V DC 1 Amp
Programmable Inputs	3 - designed to be activated by voltage-free contacts
Network Connection	Optional network card provides communication for networking 127 fire control panels
NAC Synchronization	Internal Support of System Sensor, Wheelock, Gentex, and Amseco protocols
Printer (OPTIONAL)	40 column, front-loading thermal
Zone LED Indicators (OPTIONAL)	Up to 3 banks of 48 (144) as standard
Operating Temperature	23°F to 120°F (-5°C to 49°C)
Operating Humidity	to 95% (non condensing)

Panel Model Numbers

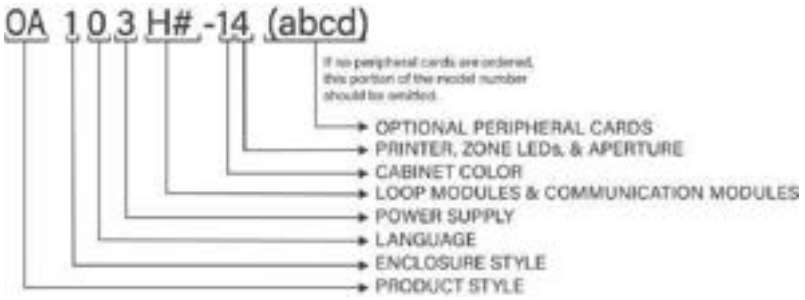

Panel Options	Valid Entries	Description
Product Style	OA	Oasis Fire Alarm Control Panel
	OV	Oasis Network Vision Annunciator
Enclosure Style	1	4 Slot Standard Enclosure
	2	4 Slot Standard Plex-Door Enclosure
	3	4 Slot Deep Enclosure
	4	4 Slot Deep Plex-Door Enclosure
	7	8 Slot Standard Enclosure - 16 Loop
	8	8 Slot Standard Plex-Door Enclosure - 16 Loop
	9	8 Slot Deep Enclosure - 16 Loop
	A	8 Slot Deep Plex-Door Enclosure - 16 Loop
	C	Annunciator
Language	0	English
	1	Portuguese
	2	Spanish
	3	Taiwanese
Power Supply	0	None
	1	5.25 A 115V
	2	5.25 A 230V
	3	10.25 A (auto-voltage sensing)
Loop Modules & Communication Modules	00	Not Fitted
	NC	Network Module only (Network Vision Annunciator)
	H#	2-Loop Panel Module, Hochiki Protocol
	I#	2-Loop Panel Module, Hochiki Protocol, and Media Gateway™
	J#	2-Loop Panel Module, Hochiki Protocol, and Network Module
	K#	2-Loop Panel Module, Hochiki Protocol, Network Module, and Media Gateway™
Cabinet Color	1	Red (RAL3002)
	4	Gray (BS 00 A 05)
	6	Black (RAL9005)
Printer, Zone LEDs & Aperture	0	No Printer / No Zone LEDs
	1	No Printer / No Zone LEDs, Blank 2nd Aperture
	3	Printer / No Zone LEDs
	4	Printer / 48 Zone LEDs
	5	No Printer / 48 Zone LEDs
	6	No Printer / 96 Zone LEDs
	7	No Printer / 144 Zone LEDs
Optional Peripheral Cards	a	16 Channel I/O Panel Module (S772)
	b	8 Channel Relay Panel Module (S791)
	c	8 Channel Conventional Zone Module (S792)
	d	4 Channel NAC Module (S793)

AS5050-250

Smoke Detector

Product Overview

Product	XP95A Smoke Detector
Part No.	AS5050-250
Digital Communication	XP95 protocol

Approvals

Product Information

The XP95A Smoke Detector uses new sensing technology, Purelight®, to detect smoke particles entering the chamber. This reduces the possibility of false alarms whilst increasing the reliability of detection of a real fire.

- Approved to UL268 7th edition
- Purelight® optical technology provides enhanced smoke detection and false alarm management
- Internal drift compensation
- Easy installation
- Backwards compatible with XP95 systems
- Base locking mechanism (grub screw)
- Polarity insensitive wiring
- In-built self test
- XPERT card addressing

Technical Data

CAUTION: System compatibility
The XP95A Smoke Detector, Part No AS5050-250 can only be used on existing systems operating with XP95 protocol.

This detector is a direct replacement for the 55000-650 XP95A Smoke Detector.

All data is supplied subject to change without notice. Specifications are typical at 24 V, 73 °F and 50 % RH unless otherwise stated.

Detection principle	*Photo-electric light scattering*
Sensor configuration	*Chamber with surface-mount infrared emitter and prism. Solid state integrated photo-diode and amplifier.*
Digital communication protocol	*XP95 protocol only*
Supply wiring	*Two wire supply, polarity insensitive*
Sampling frequency	*Once per second 1.2 -2.1%/ft*
Sensitivity	*17 V – 28 V dc*
Supply voltage (Vmin-	*5 V – 9 V peak to*
Vmax) Modulation voltage	*peak 340 µA*
Supervisory current	*1.0 mA*
Switch-on surge current	*4.0 mA*
Alarm/operated current, LED On	*Alarm (Red)*
Status indicator	*5 mA maximum*
Additional Remote LED current	*32 ºF to 131 ºF (0°C to 55°C)*
Product operating temperature	*0% to 95% RH (no condensation or icing)*
Humidity	*None*
Effect of atmospheric pressure	*0 - 300 fpm*
Air velocity	*IP44*
IP rating	
Standards and	*UL 268 7th Edition,*
Approvals	*4 in.(100 mm) diameter x 1.41 in. (36 mm) height*
Dimensions	*(1.88 in. (48) mm height with XPERT 8 Intelligent Mounting Base)*
	2.93 ozs. (83 g)
Weight	*Housing: White flame-retardant polycarbonate*
Materials	*Terminals: Tin plated stainless steel*

Electrical Description

The XP95A Smoke Detector is designed to be connected to a two-wire loop circuit carrying both data and a 17 V - 28 V dc supply. The detector is connected to the incoming and outgoing supply via terminals L1 and L2 in the mounting base. A remote LED indicator may be connected between the +R and -R terminals. A ground connection terminal is also provided.

Operation

The low profile design of the XP95A Smoke Detector is sleek and evolutionary, with a 360° LED indicator which illuminates red when in alarm.

At the heart of the smoke sensor of the XP95A Detector is Purelight® Sensing Technology which incorporates:

- Cone technology combined with a high-intensity infra-red LED to provide stability and accurate sensitivity to smoke
- A sophisticated dynamic algorithm, providing transient rejection and compensation for drift whilst maintaining accurate sensitivity

The smoke chamber of the detector is a unique cone shape which serves to reduce any stray reflection. This ultra dark internal light chamber also contains a high-intensity infra-red LED that is highly sensitive to smoke particles. When smoke enters the chamber, infra-red light is scattered and registered by the photodiode and amplifier that are included in an application-specific integrated circuit (ASIC). This circuit ensures long term reliability, even in extreme conditions.

System Compatibility

This XP95A detector has been designed to operate with XP95A detectors and loops. This XP95A detector can operate on an approved XPERT intelligent mounting base, however, the eighth bit of the address will be ignored.

The device will compensate for drift internally and the fire panel will see this as an increase in analog value. When internal drift limits are reached a fault analog value will be generated.

Maintenance And Service

Maintenance has to be done in accordance with all applicable standards. Clean the detector externally using a soft damp cloth.

Compatible Bases

Part Number	Product Name
AS5000-210	*Soteria UL Base - 4”*
AS5000-230	*Soteria UL Base – 6”*
AS5300-800	*Soteria UL CO Sounder Base - 6” High Frequency*
AS5300-802	*Soteria UL Sounder Base - 6” High Frequency*
AS5300-805	*Soteria UL CO Sounder Base - 6” Low Frequency*
AS5300-806	*Soteria UL Sounder Base – 6” Low Frequency*

	Smoke	Multi-Criteria	Heat
For existing XP95A installations choose:	***AS5050-250*** *XP95A Smoke Detector*	***AS5050-350*** *XP95A Multi-Criteria Detector (Smoke/Heat)*	***AS5500-450*** *XP95A Heat Detector*

This datasheet is to be used for marketing purposes only. Please do not use it for installation purposes. For more information, please refer to the product installation guide or contact your sales manager. All information on this datasheet is subject to change without notice.

AS5500-450

XP95A Heat Detector - UL521 7th Ed

Product Overview

Product	XP95A Heat Detector
Part No.	AS5500-450
Digital Communication	XP95 protocol

Approvals

Product Information

The XP95A Heat Detector monitors temperature by using a single thermistor which provides a voltage output proportional to the external air temperature. It is classified as an ordinary detector by UL.

- Compatible with all devices from the latest UL268 7th Edition approved XP95A range
- Electronic temperature sensing
- Alarm flag for fast alarm responding
- Automatic addressing with the XPERT 7 card
- Electronic free 4" or 6" bases
- Easy installation
- Elegant design
- Ideal for environments that are dirty or smoky under normal circumstances
- Well suited for warehouses, loading docks and parking areas

Technical Data

CAUTION: System compatibility The XP95A Heat Detector, Part AS5500-450 can only be used on existing systems operating with XP95 protocol.

All data is supplied subject to change without notice. Specifications are typical at 24 V, 73°F and 50% RH unless otherwise stated.

Sensor	*Single NTC*
Sampling	*thermistor One*
frequency Digital	*second*
communication	*XP95*
Supply voltage	*17 - 28 V dc*
Modulation	*5 V to 9 V peak to*
Voltage at	*peak*
Detector	
Supervisory current	*250 µA*
Surge current	*1 mA*
Alarm current	*3 mA max*
Operating temperature	*32 °F to 151°F*
range Humidity	
Standards and	*0% to 95% RH (no*
approvals Dimensions	*condensation or icing)*
Weight	*UL, FM*
Materials	*3.93" diameter x 1.65" height*
	3.70 oz
	Housing: White flame-
	retardant polycarbonate
Test method	*Terminals: Tin plated stainless*
Spacing	*steel*
	Hair dryer
Smooth ceiling	*60ft*
to wall or	*25 ft*
partition	

All information in this document is given in good faith but Avenger Systems LLC cannot be held responsible for any omissions or errors. The company reserves the right to change the specifications of products at any time and without prior notice.

Operation

The XP95A Heat Detector has a common profile with the ionisation and optical smoke detectors but has a low air flow resistance case made of white polycarbonate.

The device monitors heat using a single thermistor network which provides a voltage output proportional to the external air temperature.

Electrical description

The XP95A Heat Detector is designed to be connected to a two wire loop circuit carrying both data and a 17 V to 28V dc supply. The detector is connected to the incoming and outgoing supply via terminals L1 and L2 in the mounting base. A remote LED indicator requiring not more than 1 mA may be connected between the +R and L2 terminals. An earth connection terminal is also provided. The detector is calibrated to give an analogue value of 25±5 counts at 70°F. This value increases with rising temperature. A count of 55 corresponds to the UL

alarm sensitivity level of 135ºF.

When the detector is energized the ASIC regulates the flow of power and controls the data processing. The thermistor provides an output over normal operating ranges that is proportional to the external air temperature. The voltage output is processed in the analogue to digital converter and stored by the communications ASIC. It is transmitted to the control equipment when the device is interrogated. When a count of 55 is exceeded the alarm flag is initiated and the device address is added to the data stream every 32 polling cycles from its last polling for the duration of the alarm level condition, except when an alarming device is being interrogated. This can provide a location identified alarm from any device on the loop in approximately two seconds.

Environmental characteristics

The XP95A Heat Detector range is unaffected by wind or atmospheric pressure. Standard detectors are rated at 200 ºF.

Response characteristics of XP95A Heat Detector

Type of fire	Heat Detector
OverHeating/Heat combustion	Very poor
Smouldering/glowing combustion	Very poor
Flaming combustion	Poor
Flaming with high Heat output	Moderate/Good
Flaming - clean burning	Moderate/Good

Part #	Product Name
AS5000-210	*Soteria UL Base - 4"*
AS5000-230	*Soteria UL Base – 6"*
AS5300-800	*Soteria UL CO Sounder Base - 6" High Frequency*
AS5300-802	*Soteria UL Sounder Base - 6" High Frequency*
AS5300-805	*Soteria UL CO Sounder Base - 6" Low Frequency*
AS5300-806	*Soteria UL Sounder Base – 6" Low Frequency*

	Smoke	Multi-Criteria	Heat
For existing XP95A installations choose:	***AS5050-250*** *XP95A Smoke Detector*	***AS5050-350*** *XP95A Multi-Criteria Detector (Smoke/Heat)*	***AS5500-450*** *XP95A Heat Detector*

Addressable Heat Detector Diagram

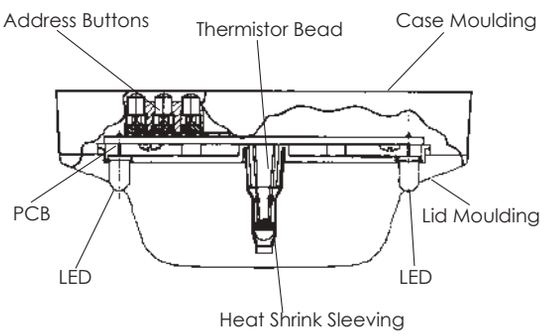

This datasheet is to be used for marketing purposes only. All information on this datasheet is subject to change without notice. Technical information about installation can be found in the product installation guide which can be found on our website.

All information in this document is given in good faith but Avenger Systems LLC cannot be held responsible for any omissions or errors. The company reserves the right to change the specifications of products at any time and without prior notice.

AS5050-350

Multi-Criteria Detector (Smoke/Heat)

Product Overview

Product	XP95A Multi-Criteria Detector (Smoke/Heat)
Part No.	AS5050-350
Digital Communication	XP95 protocol

Approvals

Product Information

The XP95A Multi-Criteria Detector (Smoke/Heat) uses new photoelectric sensing technology, Purelight®, to detect smoke particles entering the chamber. It reduces the possibility of false alarms whilst increasing the reliability of detecting a real fire.

- Approved to UL 268 7th edition and UL 521
- Purelight® optical technology provides enhanced smoke detection and false alarm management
- Internal drift compensation
- Compatible with XP95A systems
- Easy installation
- XPERT card addressing
- Base locking mechanism (grub screw)
- Polarity insensitive loop wiring
- In-built self-test
- Dual heat sensors

Technical Data

CAUTION: System compatibility
The XP95A Multi-Criteria Detector (Smoke/Heat), Part No AS5050-350 can only be used on systems operating with XP95 protocol

This detector is a direct replacement for AS55000-886 XP95A Multisensor Detector (Smoke/Heat)

All data is supplied subject to change without notice. Specifications are typical at 24 V, 73 °F and 50 % RH unless otherwise stated.

Detection principle	*Smoke* *Heat*	*Smoke light scattering* *Thermistor*
Sensor configuration	*Smoke* *Heat*	Chamber with surface-mount infrared emitter and prism. Solid state integrated photo-diode and amplifier. Dual exposed heat sensing elements
Digital communication protocol	*XP95 protocol*	
Supply wiring	*Two wire supply, polarity insensitive*	
Sampling frequency	*Once per second*	
Sensitivity	*1.2 - 2.1 %/ft*	
Supply voltage (Vmin-Vmax)	*17 V – 28 V dc*	
Modulation voltage	*5 V – 9 V peak to peak*	
Supervisory current	*340 µA*	
Switch-on surge current	*1.0 mA*	
Alarm/operated current, LED On	*4.0 mA*	
Status indicator	*Alarm (Red)*	
Additional Remote LED current	*5 mA maximum*	
Product operating temperature	*32 ºF to 131 ºF (0°C to 55°C)*	
Humidity	*0% to 95% RH* *(no condensation or icing)*	
Effect of atmospheric pressure	*None*	
Air velocity	*0 - 300 fpm*	
IP rating	*IP44*	
Standards and Approvals	*UL 268 7th Edition, ULC S529, FM 3230*	
Dimensions	*4 in.(100 mm) diameter x 1.50 in. (38mm) height* *(2in. (50) mm height with XPERT Intelligent Mounting Base)*	
Weight	*2.93 oz. (83 g)*	
Materials	*Housing: White flame-retardant polycarbonate* *Terminals: Tin plated stainless steel*	

Electrical Description

The XP95A Multi-Criteria Detector (Smoke/Heat) is designed to be connected to a two-wire loop circuit carrying both data and a 17 V - 28 V dc supply. The detector is connected to the incoming and outgoing supply via terminals L1 and L2 in the mounting base. A remote LED indicator may be connected between the +R and -R terminals. A ground connection terminal is also provided.

Operation

The low profile design of the XP95A Multi-Criteria Detector (Smoke/Heat) is sleek and evolutionary, with a 360° LED indicator which illuminates red when in alarm.

At the heart of the photoelectric smoke sensor is Purelight® Sensing Technology which incorporates:

- Cone technology combined with a high-intensity infra-red LED to provide stability and accurate sensitivity to smoke.
- A sophisticated dynamic algorithm, providing transient rejection and compensation for drift whilst maintaining accurate sensitivity.

Signals from the photoelectric smoke chamber and temperature sensors are independent and represent the smoke level and air temperature respectively in the vicinity of the detector; the detectors micro-controller processes both signals. The temperature signal processing extracts only rate-of-rise information for combination with the smoke signal.

The optical sensor will trigger an alarm at 1.2 %/ft and the heat sensor at 69.8 ºF (21 ºC) rise. Minimum time to alarm is ten seconds.

The detector will not respond to slow increases in temperature, but a large, sudden change can cause an alarm without the presence of smoke.

The sensor will respond to smoke or heat, or a combination of both.

System compatibility

This XP95A detector has been designed to operate with XP95A detectors and loops. This XP95A detector can operate on an approved XPERT intelligent mounting base, however, the eighth bit of the address will be ignored.

The device will compensate for drift internally but will not report drift values to the fire alarm control panel. When internal drift limits are reached a fault analog value will be generated.

Maintenance and Service

Maintenance has to be done in accordance with all applicable standards. Clean the detector externally using a soft damp cloth.

Compatible Bases

Part Number	Product Name
AS5000-210	*Soteria UL Base - 4”*
AS5000-230	*Soteria UL Base – 6”*
AS5300-800	*Soteria UL CO Sounder Base - 6” High Frequency*
AS5300-802	*Soteria UL Sounder Base - 6” High Frequency*
AS5300-805	*Soteria UL CO Sounder Base - 6” Low Frequency*
AS5300-806	*Soteria UL Sounder Base – 6” Low Frequency*

	Smoke	Multi-Criteria	eat
For existing XP95A installations choose:	***AS5050-250*** *XP95A Smoke Detector*	***AS5050-350*** *XP95A Multi-Criteria Detector (Smoke/Heat)*	***AS5500-450*** *XP95A Heat Detector*

This datasheet is to be used for marketing purposes only. Please do not use it for installation purposes. For more information, please refer to the product installation guide or contact your sales manager. All information on this datasheet is subject to change without notice.

Technical Data P 5A Detectors

Detector Model No	AS5000-250	AS5000-350	AS5500-450
Detector Type	XP95A Smoke Detector	XP95A Multi-Criteria Detector (Smoke/ Heat)	XP95A Heat Detector
uivalent Obsolete Dectector	AS55000-650	AS55000-886	AS55000-450
L Listed oltage	17 - 28 V dc	17 - 28 V dc	17 - 28 V dc
Modulation oltage peak to peak	5 - 9 V	5 - 9 V	5 - 9 V
Ma imum Alarm Current L D on	4 mA	4 mA	2.5 mA
Surge Current	1 mA	1 mA	1 mA
Supervisory Current	340 µA	500µA	250µA
Additional Remote L D Current	5 mA	5 mA	5 mA
eat lement Rating	N/A	Rate of Rise (RoR) 20ºF/ min (11ºC/min)	131ºF (55ºC)
Sensitivity	UL 1.23%/Ft -2.09%/Ft ULC 1.44%- 2.3%/Ft	UL 1.23%/Ft -2.09%/Ft ULC 1.44%- 2.3%/Ft	N/A
L LC Instruction	Smoke-automatic fire detec-tor for use with a S5022 UL/ULC listed base	Smoke-automatic fire detector head with integral heat detector for use with a S5022 UL/ULC listed base	Heat-automatic fire detector for use with a S5022 UL/ULC listed base
Test Method	Please refer to the panel manufacturer instructions Spray with any of the following smoke products: Solo Detector Testers Solo A10 • Smoke Sabre Smoke Detector Tester • Solo Detector Testers Solo 365 • Solo Detector Testers Testifie		Hair Dryer

Technical Data Soteria L Detectors

Detector Model No	AS5150-650**	AS5150-750**	AS5800-450
Detector Type	Soteria UL Smoke Detector	Soteria UL Multi-Criteria Detector (Smoke/Heat)	Discovery/Soteria UL Non-isolating Heat Detector
uivalent Obsolete Dectector	AS58000-650	AS58000-750	AS58000-450
L Listed oltage	17- 28 V dc	17 - 28 V dc	17- 28 V dc
Modulation oltage peak to peak	5 - 9 V	5 - 9 V	5 - 9 V
Ma imum Alarm Current L D on	4 mA	4 mA	3.5 mA
Surge Current	1 mA	1 mA	1 mA
Supervisory Current	500 µA	500µA	500µA
Additional Remote L D Current	5 mA	5 mA	5 mA
eat lement Rating	N/A	Modes 1,3,4 Rate of Rise (RoR) 20ºF/min (11ºC/min). Mode 5 135ºF (57ºC)	135ºF (57ºC) - 210ºF (99ºC)
Sensitivity	AS5000-250	AS5000-350	N/A
L LC Instruction	Smoke-automatic fire detec-tor for use with a S5022 UL/ULC listed base	Smoke-automatic fire detector head with integral heat detector for use with a S5022 UL/ULC listed base	Heat-automatic fire detector for use with a S5022 UL/ULC listed base
Test Method	Please refer to test methods in the table above		

* All current measurements made with polling off **Isolation feature is only available in AS5150-650 and AS5150-750

AVENGER

XP95A & Soteria UL 268 7th Edition Detectors Installation Instructions

Product Datasheet

General

These instructions apply to the Avenger Soteria UL Bases. Please refer to the table below for instructions on how to install:

Applicable Wiring Diagram (page 3)	Applicable Products
Fig. 1 - New Installs (supports isolation)	AS5000-210 – Soteria UL Base - 4" AS5000-230 – Soteria UL Base - 6"
Fig. 2 - Retrofits or Isolator bypassed with a Remote LED	AS5000-210 - Soteria UL Base - 4" AS5000-230 - Soteria UL Base - 6"
Fig. 3 - Retrofits or Isolator bypassed with a Common Remote LED	AS5000-210 - Soteria UL Base - 4" AS5000-230 - Soteria UL Base - 6"

Installation

These products must be installed in accordance with the applicable NFPA standards, local codes and jurisdictional authorities. Failure to follow these instructions may result in failure of the detectors to report an alarm condition. Avenger Fire Detectors Limited is not responsible for detectors which are improperly installed, maintained or tested.

Before installing these products, check the continuity, polarity and insulation resistance of all wiring. Check that installation is in accordance with the fire system drawings and conforms to all applicable local codes such as NFPA 72.

Use 3" octagonal box for direct connection to the base. 4" octagonal and 4" square boxes may be used with compatible UL listed mounting brackets. When mounting on a wall, install 4" to 12" from the ceiling. Secure the base to the electrical box with appropriate screws. **Do not overtighten the screws**. For information on how to set the address of each device correctly refer to the section 'XPERT 8 Card Addressing' overleaf.

If you are using shielded cable, please follow the instructions below:

1. Connect the shield to the ⏚ terminal on the base.
2. When shielded loop cable is used, connection of the shield, also known as the functional earth (FE), must be terminated in accordance with the control panel manufacturer's recommendations and local codes.
3. Unless instructed otherwise, ensure that all segments of the loop cable has functional earth (FE) continuity and take care that it is isolated from building earth (also known as protective earth (PE)) points such as metalwork, cable trays or junction boxes.

PLEASE NOTE:

Smoke detectors are NOT to be used with detector guards.

During construction work it is essential that the detector has it's dust cover fitted. The build-up of dust inside a detector can lead to a trouble signal or false alarm.

Installation Diagram

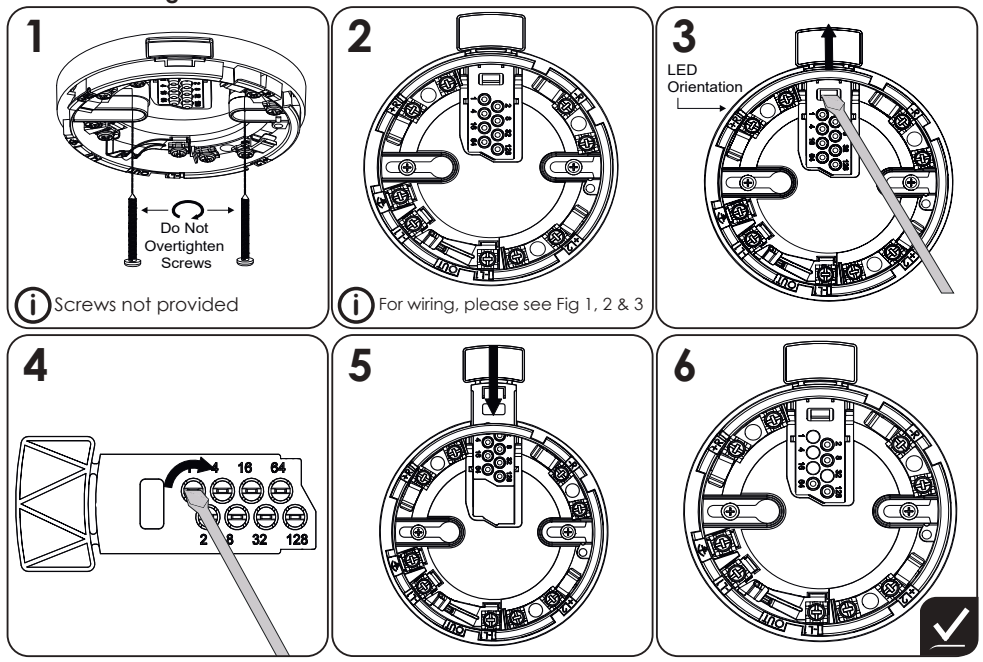

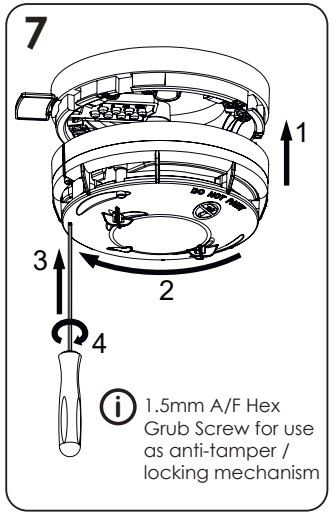

XPERT 8 Card Addressing

Select the desired address and remove the pips indicated in black.

To reach maximum address range use Soteria UL Bases with XPERT 8 card, Soteria Detector and Core Protocol Control Panel.

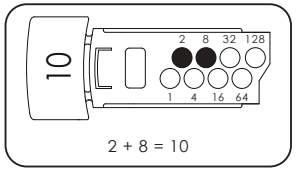

2 + 8 = 10

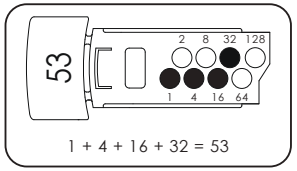

1 + 4 + 16 + 32 = 53

Wiring

CAUTION: Do not use looped wire under wiring terminals. Break wire run to provide supervision of connections. Terminals L1 and L2 are polarity sensitive. It is recommended the wiring be no smaller than 18AWG (0.8mm^2). Wire sizes up to 14 AWG (3.3mm^2) may be used.

Warning: Check the base compatibility before installing
Check the polarity for Soteria UL detector installation

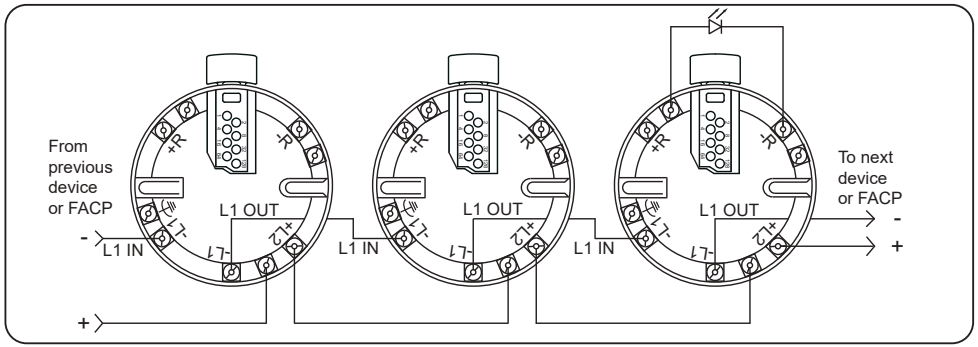

Fig. 1 Schematic Wiring Diagram: Soteria UL Base wiring with remote LED connection. To be used with new installs for XP95A and Soteria UL detectors

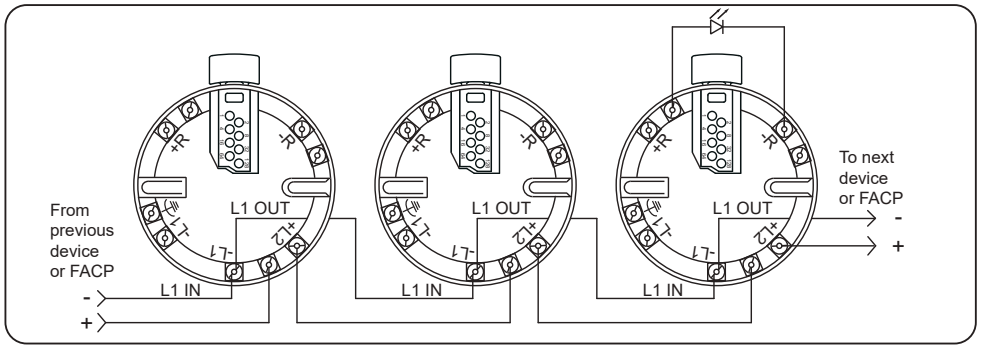

Fig. 2 Schematic Wiring Diagram: Soteria UL Base Detector to bypass isolator with remote LED connection. To be used in a retrofit application for the older version of XP95A or Discovery UL product. Can also be used when the isolator feature is not required

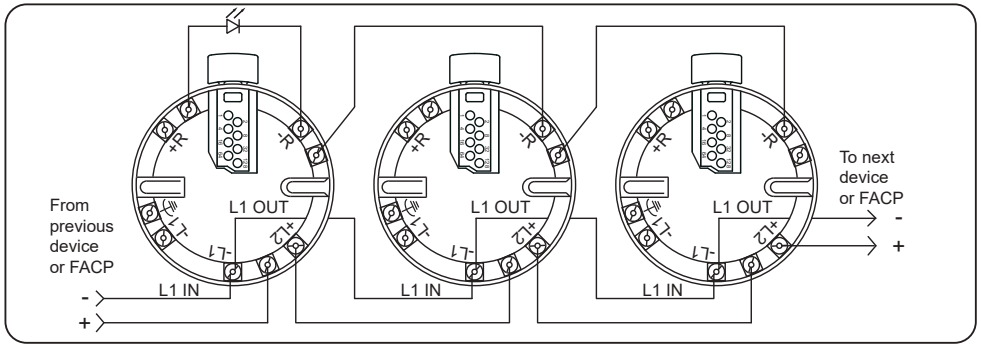

Fig. 3 Schematic Wiring Diagram: Soteria UL Base to bypass isolator with a Common Remote LED. To be used in a retrofit application for the older version of XP95A or Discovery UL product. Can also be used when the isolator feature is not required

AS45681-211

XP95 ISOLATOR BASE

This isolator base is for use with negative type isolators. The negative isolator which connects to this base is polarity sensitive and should be connected in accordance with the diagram below.

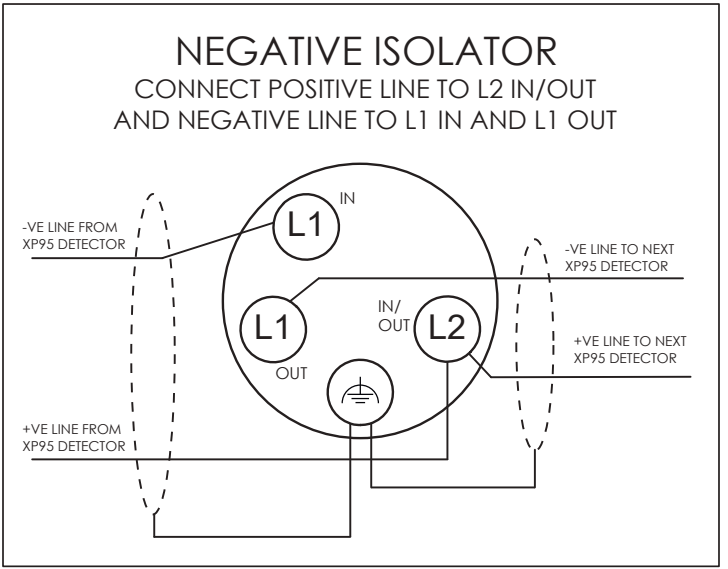

The earth terminal provided is for continuity of screen. Connection to this terminal is not required for operation of the base or isolator connected to it.

AS4705-700

SWITCH MONITOR MODULE

Product Datasheet

Product Overview

Product	Switch Monitor Module
Part No.	AS4705-700
Digital Communication	XP95 and Discovery

Product Information

The Switch Monitor Module is a loop-powered device incorporating a monitored input circuit for connection to remote switches, for indoor use only.

- Built-in isolator
- Visible LEDs
- Loop Powered
- Ground fault detection
- Selectable priority to monitor equipment where a fast response is required
- Interrupt facility
- Improved design for ease of wiring

Approvals

Technical Data

All data is supplied subject to change without notice Specifications are typical at 24 V, 73°F and 50% RH unless otherwise stated.

	General	
Product Operating Temperature	32°F to 120°F	
Humidity	10% to 93% RH (no condensation or icing)	
Standards and Approvals	UL, ULC, FM, CSFM	
Dimensions	4.9” W x 4.9” H x 1.175” D	
Materials	Housing: UL94 V-0 polycarbonate	
Wire Size	12 - 24 AWG	
	LED Status	
LED Color	Description	XP95/Discovery Compatibility
Green	Polling	x
Yellow (solid)	Isolation	x
Red	Alarm	x
	Single Line Cirvuit (SLC) - Supervised Power Limited	
Supply Voltage	17 V to 28 V DC	
Modulation Voltage	5 V - 9 V peak to peak	
Supervisory Current	500 µA	
Switch-on Surge Current	900 µA	
Alarm/Operated Current, LED ON	1.6 mA per LED	
Maximum Loop Current	1 A	
	Initiating Device Circuit (IDC)	
Wiring Styles	Supervised power limited Class A and Class B	
Voltage	3.3 V DC	
Line Impedance	100 Ω Max	
End-of-Line Resistors*	47 kΩ	

**Note: A UL listed end-of-line resistor is available at Avenger - Part No. 44251-146*

AS4705-701

RELAY OUTPUT MODULE

Product Datasheet

Product Overview

Product	Relay Output Module
Part No.	AS4705-701
Digital Communication	XP95 and Discovery

Product Information

The Relay Output Module is a loop-powered device which incorporates a 240 V rated volt-free relay output. The module can be used outdoors if mounted in a suitable weatherproof enclosure.

- Built-in isolator
- Visible LEDs
- Loop Powered
- Improved design for ease of wiring

Approvals

Technical Data

All data is supplied subject to change without notice Specifications are typical at 24 V, 73°F and 50% RH unless otherwise stated.

	General	
Product Operating Temperature	32°F to 120°F	
Humidity	10% to 93% RH (no condensation or icing)	
Standards and Approvals	UL, ULC, FM, CSFM	
Dimensions	4.9” W x 4.9” H x 1.175” D	
Materials	Housing: UL94 V-0 polycarbonate	
Wire Size	12 - 24 AWG	
	LED Status	
LED Color	Description	XP95/Discovery Compatibility
Green	Polling	x
Yellow (solid)	Isolation	x
Single Line Cirvuit (SLC) - Supervised Power Limited		
Supply Voltage	17 V to 28 V DC	
Modulation Voltage	5 V - 9 V peak to peak	
Supervisory Current	500 µA	
Switch-on Surge Current	900 µA	
Alarm/Operated Current, LED ON	1.6 mA per LED	
Maximum Loop Current	1 A	
	Output Circuit	
Relay Output	Non-Supervised	
	Programmable	
	Dry Contact	
	30 V DC - 4 A - resistive	
	240 V AC - 4 A - resistive	

Product Datasheet

AS56000-005

Intelligent Apollo Protocol Dual Action Polycarbonate Pull Station

The Avenger Intelligent Dual Action Polycarbonate Pull Station (AS56000-005) is a low profile, high quality addressable manual pull station. Easily recognizable during a fire situation, the AS56000-005 station is constructed of rugged polycarbonate for long life and reliability, with a red finish and raised white “FIRE” lettering. A red LED visible through the face of the station flashes during polling and turns on steady in alarm. Each station includes a key-lock for resetting (CAT B / CAT 30) which is common with the Axis AX Series Intelligent Fire Alarm Control Panels.

The AS56000-005 stations are UL 38 Listed, meet the ADAAG controls and operating guidelines, and the ADA requirements for five pound maximum activation force.

The AS56000-005, Intelligent Dual Action Polycarbonate Pull Station, can be mounted semi-flush onto a standard single-gang electrical outlet box. If installations require surface mounting, an optional polycarbonate surface back box (AS56000-006) is available.

Features

- ADA and ADAAG Compliant
- Dual Action Design
- Rugged Polycarbonate Construction
- Red Status LED
- Easy Key-Lock Reset
- Yellow Activation Stripe

Listings and Approvals

- UL 38 Listed: UNIU.S24867 / ML File: S25235
- ETL ANSI/UL 864 Listed: 101564744NYM-001
- NYCFD COA: #6105A2

Operation

The AS56000-005 stations are operated by pushing in on the plate marked “PRESS”, and then pulling down on the handle marked “PUSH”, this will latch the handle in the down/activated position. Once latched, a bright yellow activated stripe will appear at the bottom of the station face. To reset the station, simply unlock the station with the reset key (keyed to match Axis AX Series Intelligent Fire Alarm Control Panels) and allow the door to open. This action resets the handle; while closing the door automatically resets the toggle switch to its “STDBY” position.

Wiring Diagram

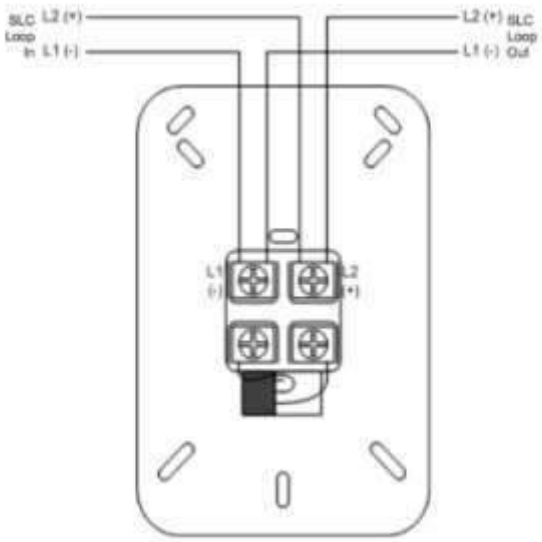

Specification

Operating Voltage	20-28 VDC, with Communication Pulses 5-9 VDC
Operating Current Quiescent Alarm	 0.2 mA 3.8 mA
Operating Temperature	32 ° F (0 ° C) to 120 ° F (49 ° C)
Relative Humidity	10% to 93% Non-Condensing
Dimensions Pull Station Surface Back Box	 5 1/2 ” H x 4 1/4 ” W x 1” D 5 1/2 ” H x 4 1/4 ” W x 1 1/2 ” D
Weight Pull Station Pull Station with Surface Back Box	 7.04 oz 11.5 oz
Analog Value	16 = Normal, 64 = Alarm, 4 = Trouble
Address Range	1 - 126 (DIP Switch Programmable)
Color	Red with Raised White Letters, White “PRESS” and “PUSH” Bars

Order Codes and Options

AS56000-005	Intelligent Dual Action Polycarbonate Pull Station
AS56000-006	Polycarbonate Surface Back Box

AS58000-011

Open-Area Sounder Visual Indicator

Product Overview

Product	Open-Area Sounder Visual Indicator
Part No.	AS58000-011
Digital Communication	Discovery (XP95 and CoreProtocol® compatible)

Compliance

Product Information

The Discovery UL Open-Area Sounder Visual Indicator is an alarm device made up of a sounder, visual indicator and short-circuit isolator. It is used to provide audible and visual warning of fire and is controlled by the fire control panel.

- 15 evacuation tones + 15 secondary or alert tones
- Seven volume levels
- Alarm switching by individual device, of all devices on the loop
- Independent control of sounder and beacon
- Set-up and testing of devices at point of installation
- Isolator status information
- Sounder automatically silences after 20 minutes (optional)
- Class change bell tone

Technical Data

All data is supplied subject to change without notice. Specifications are typical at 24V, 73°C and 50% RH unless otherwise stated.

*Operating voltage**		*17 V - 28 V dc**
Digital communication		*Discovery, (XP95 and CoreProtocol compatible)*
Supervisory current		*< 750 µA*
Switch-on surge current Sounder		*< 2.6 mA for 1 second Variable*
operating Temperature range Humidity		*32°F to 100°F (0ºC to 38ºC) 10% to 93% RH (no condensation or icing)*
IP Rating		*IP65*
Standards & approvals		*UL, CSFM*
Dimensions		*3.85 in. (98 mm) diameter x 4.09 in. (104 mm) height*
Weight		*3.7 oz (105 g)*
Materials	*Housing*	*Red flame-retardant polycarbonate*
	Terminals	*Nickel plated stainless steel*

*Note: *Special application per UL 464. Requires a compatible control unit for proper operation.*

The right tone for your installation

The Discovery UL Open-Area Sounder Visual Indicator offers a choice of 15 evacuation tones, including the standard Avenger evacuation tone. One of these tones is selected during commissioning in order to suit local regulations or customs.

Whichever evacuation tone is selected, there is a secondary tone which may be used for alerting or warning of a possible evacuation.

The right level of sound

The sounder is set during commissioning to one of seven levels of sound.

Sounder; visual indicator or both

The Discovery UL Open-Area Sounder Visual Indicator normally switches both sounder and visual indicator to provide an alert or evacuation signal. There might be instances where a flash or a sounder would not be permitted.

It is a simple choice as to whether to switch both sounder and visual indicator together or to switch either as necessary.

Location specific volume setting

Detectors and sounder visual indicators are installed in many different types of environment. When configuring the Discovery UL Open-Area Sounder Visual Indicator the adjustment of the volume can be done at the point of installation.

The commissioning engineer simply sets the control panel to 'Set-up' and then walks from one device to the next to set the required volume, using a magnetic wand. When all devices have been set the engineer simply presses a button on the control panel which then registers all the individual volume settings.

The Discovery UL Sounder Visual Indicator Base offers a choice of 15 evacuation tones, including the standard Avenger evacuation tone. One of these tones is selected during commissioning in order to suit local regulations or customs.

The tones include those required by UK, Dutch, Swedish, German, Australian, New Zealand and North American standards.

Whichever evacuation tones is selected there is a secondary tone which may be used for alerting or warning of a possible evacuation.

In many installations a fire alarm must be raised by switching more than one sounder visual indicator to alert or alarm simultaneously. This is achieved with Sounder Visual Indicator Bases by assigning devices to groups on commissioning, with the group information being stored in each device. One command will then switch on all devices in the group.

Tone Settings

Byte value	Primary tone		Tone No.	Secondary tone		Tone No.
1	Apollo Evacuation Tone	567 Hz for 0.5 seconds 850 Hz for 0.5 seconds	T1	Avenger Alert Tone	1 second off, 1 second 850 Hz	T0
2	Alternating - Hochiki and Fulleon	925 Hz for 0.25 seconds 626 Hz for 0.25 seconds	T12	Continuous Hochiki and Fulleon	925 Hz	T11
3	Medium Sweep	800 Hz to 970 Hz at 1 Hz	T14	Continuous	970 Hz	T13
4	Fast Sweep	2500 Hz -2850 Hz at 9 Hz	T16	Continuous	2850 Hz	T15
5	Dutch Slow Whoop - sweep	500 Hz to 1200 Hz for 3.5 sec, 0.5 sec off	T3	Continuous	850 Hz	T2
6	DIN Tone - sweep	1200 Hz to 500 Hz for 1 sec	T4	Continuous	850 Hz	T2
7	Swedish Fire Tone	660 Hz, 150 ms on, 150 ms off	T18	Swedish all clear signal - continuous	660 Hz	T17
8	Australia - fast rise sweep	3 x (500 Hz - 1200 Hz for 0.5 sec), 0.5 sec off	T6	Australia Alert Tone	420 Hz, 0.625 sec, 0.625 sec off	T5
9	New Zealand -slow rise sweep	500 Hz - 1200 Hz for 3.75 sec, 0.25 sec off	T7	New Zealand Alert Tone	420 Hz, 0.625 sec, 0.625 sec off	T5
10	US Temporal LF ISO8201*	3 x (970 Hz, 0.5 sec on, 0.5 sec off) 1 sec off	T19	Continuous	970 Hz	T13
11	US Temporal HF ISO8201*	3 x (2850 Hz, 0.5 sec on, 0.5 sec off) 1 sec off	T20	Continuous	2850 Hz	T15
12	Simulated Bell-Continuous	Continuous	T8	Simulated Bell - Intermittent	1second on 1 second off	T9
13	Emergency Warning Siren	N/A	T10	Emergency Warning - All Clear	N/A	T10
14	Evacuation Tone	970 Hz continuous	T13	Alert Tone	Silence for 1 second 970 Hz for one second	T19
15	Apollo Evacuation Tone	567 Hz for 0.5 sec, 850 Hz for 0.5 sec	T1	Avenger Alert Tone	1 second off 1 second 850 Hz	T0

* UL compliant tone

UL Listings

UL Product iQ®

Control Unit Accessories, System

COMPANY

Avenger Systems LLC
11586 Zagarolo Lane
Las Vegas, NV 89141 United States

S35689

View model for additional information

Fire Alarm Equipment, Model(s): AS4705-600, AS4705-706, AS4705-720

Isolator modules (Isolator Base), Model(s): AS45681-211

Isolator modules (Isolator), Model(s): AS55000-750

Investigated to UL 864 (10th edition)
Relay Module, Model(s): AS4705-701

Switch Monitor Input/Output Module, Model(s): AS4705-703

Switch Monitor Module, Model(s): AS4705-700

Investigated to UL 864 (9th edition)
Contact module, Model(s): AS6020-00, AS6021-00

Relay modules, Model(s): AS6052-00, AS6053-00, AS6054-00, AS6055-00

Short circuit isolators, Model(s): AS6003-00

Last Updated on 2024-12-06

The appearance of a company's name or product in this database does not in itself assure that products so identified have been manufactured under UL Solutions' Follow - Up Service. Only those products bearing the UL Mark should be considered to be Certified and covered under UL Solutions' Follow - Up Service. Always look for the Mark on the product.

UL Solutions permits the reproduction of the material contained in Product iQ subject to the following conditions: 1. The Guide Information, Assemblies, Constructions, Designs, Systems, and/or Certifications (files) must be presented in their entirety and in a non-misleading manner, without any manipulation of the data (or drawings). 2. The statement "Reprinted from Product iQ with permission from UL Solutions" must appear adjacent to the extracted material. In addition, the reprinted material must include a copyright notice in the following format: "©2024 UL LLC."

UL Product iQ®

Smoke Detectors for Fire Alarm Systems

COMPANY

Avenger Systems LLC
11586 Zagarolo Lane
Las Vegas, NV 89141 United States

S35692

Investigated to UL 268 (7th ed.)
Products Suitable for Ducts, D(I) and D(ST) are investigated to UL 268A

Detector Model	Application	Type	Compatibility Restrictions	Velocity Range (fpm) Min	Velocity Range (fpm) Max	date of Manufacture	Time of Manufacture Firmware Version	Firmware Version Update
AS2015-00	OAP, D(I)	P	D2	32	4000	2023-01-01	1.4	-
AS5050-250	-	P	D4	0	300	-	-	-
AS5050-350	-	P(IHD)	D5	-	-	-	-	-

Base Model	Related Detector	Control Unit Compatibility Restrictions
AS5000-210	AS5050-250, AS5050-350	B3
AS7013-00	ACC-V, ACC-V (WHT), AIE-EA, ACA-V,-W(d), ALK-V, ALO-V, ALO-V(WHT)	B2
AS7014-00	ACC-V, ACC-V (WHT), AIE-EA, ACA-V,-W(d), ALK-V, ALO-V, ALO-V(WHT)	B2
AS7017-00	ALG-V, ALK-V,-W, ALK-V2,-W,, ACA-V,-W(d), AIE-EA, ALN-V, ALN-V (WHT) (a), ACC-V, ACC-V (WHT), ACD-V (d), (f), ALO-V, ALO-V(WHT)	B2
AS7018-00	ALK-V,-W, ALK-V2,-W,, ACA-V,-W(d), AIE-EA, ALN-V, ALN-V (WHT) (a), ACC-V, ACC-V (WHT), ACD-V (d), (f), ALO-V, ALO-V(WHT)	B2

Investigated to UL 268 (previous editions)
Products Suitable for Ducts, D(I) and D(ST) are investigated to UL 268A

Detector	Compatibility	Velocity Range (fpm)	date of	Time of Manufacture	Firmware Version

Model	Application	Type	Restrictions	Min	Max	Manufacture	Firmware Versio	Update
AS2011-00	OAP, D	P	D2	0	4000	-	-	-
AS2012-00	OAP, D	P	D2	0	4000	-	-	-
AS2014-00 (a)	OAP, D(I)	P	D2	0	4000	-	-	-
AS2032-00	OAP	P	D2	0	4000	-	-	-
AS2033-00	OAP	P	D2	0	300	-	-	-
AS2034-00	OAP	P	D2	0	300	-	-	-
AS2041-00	OAP	P	D6	0	1000	-	-	-
AS2042-00	OAP, D, D(I)	P	D2	300	4000	-	-	-
AS2043-00	OAP, D, D(I)	P	D2	300	4000	-	-	-
AS2044-00	OAP, D, D(I)	P	D2	300	4000	-	-	-
AS5013-00	D(ST)	P	D2	300	4000	-	-	-
AS5014-00	D(ST)	P	D2	300	4000	-	-	-
AS5015-00	D	P	D2	0	4000	-	-	-

Base Model	Related Detector	Control Unit Compatibility Restrictions
AS2049-00	AS5015-00	B2
AS2050-00	AS2032, AS2033, AS2034, AS2042-00, AS2043-00, AS2044-00	B2
AS2051-00	AS2032, AS2033, AS2034, AS2042-00, AS2043-00, AS2044-00	B6
AS7001-00	-	B2
AS7002-00	-	B2
AS7003-00	-	B3
AS7004-00	-	B3
AS7005-00 (b)	ALG-V, ALK-V, ALK-V2, ACA-V, AIE-EA, ATG-EA, ATJ-EA, ALN-V,FWC-FSLC-SMK (a), and ACC-V, ACD-V, ACD-VW	B2
AS7008-00	-	B2
AS7015-00	ALO-V, ALO-V(WHT)	B3
AS7016-00	ALO-V, ALO-V(WHT)	B3

B2 - For connection to Listed control units with which compatibility was determined by test or a review of circuit parameters. Interconnection and compatible models indicated on installation wiring diagram for detector (base) and/or control unit.

B3 - For connection to a Listed open area protection smoke or heat detector head with which compatibility was determined by test or a review of circuit parameters. Refer to the manufacturer's installation instructions for a list of compatible models.

B6 - This base is also suitable for connection to any manufacturer's Listed compatible control unit in a four-wire configuration, as indicated on the installation drawing of control unit and/or detector/base.

D2 - For connection to Listed control units with which compatibility was determined by test or a review of circuit parameters. Interconnection and compatible models indicated on installation wiring diagram for detector (base) and/or control unit.

D4 - For connection to any manufacturer's Listed compatible control unit.

D5 - For use only with Listed control units with which compatibility was determined by test.

D6 - When using 2-wire bases Listing limited to specific system control unit. Information on compatible control unit indicated on installation drawing of control unit and/or detector. When using 4 wire bases, no restriction on compatibility.

OAP - Open Area Protection

D(I) - Duct Detector - Installation Inside Duct

P - Photoelectric

IHD - Includes Integral Heat Detector

D - Duct Detector

D(ST) - Duct Detector - Sampling Tubes

date of Manufacture identifies the manufacturing start date of all product models that will use the specific Time of Manufacture Firmware Version. The date of manufacture is noncoded and in the format YEAR (in 4 digits), MONTH (in letters), DAY (in 2 digits).

Time of Manufacture Firmware Version identifies a numerical and/or alphabetic series designation that is product and date-code specific and will only identify the Firmware Version at the time the product was manufactured. The numeric and/or alphabetic sequence is defined by the manufacturer.

Firmware Version Update is a numerical and/or alphabetic sequential identification that is product and date-code specific and sequentially identifies the Firmware Version Update from the previous version of firmware. The numerical and/or alphabetic sequence is defined by the manufacturer.

(a) - Complimentary Listed (UQGS, File S35692) as a Heat-Automatic Fire Detector

(b) - Low Frequency 520Hz Detector Sounder Base, also complimentary Listed (ULSZ, File S35913) as an Audible Signal Appliance.

Last Updated on 2024-11-07

The appearance of a company's name or product in this database does not in itself assure that products so identified have been manufactured under UL Solutions' Follow - Up Service. Only those products bearing the UL Mark should be considered to be Certified and covered under UL Solutions' Follow - Up Service. Always look for the Mark on the product.

UL Solutions permits the reproduction of the material contained in Product iQ subject to the following conditions: 1. The Guide Information, Assemblies, Constructions, Designs, Systems, and/or Certifications (files) must be presented in their entirety and in a non-misleading manner, without any manipulation of the data (or drawings). 2. The statement "Reprinted from Product iQ with permission from UL Solutions" must appear adjacent to the extracted material. In addition, the reprinted material must include a copyright notice in the following format: "©2024 UL LLC."

UL Product iQ®

Heat-automatic Fire Detectors

COMPANY

Avenger Systems LLC

11586 Zagarolo Lane
Las Vegas, NV 89141 United States

S35691

Model No.	Type	Compatibility Restrictions	Contact Arrangement	Temp Range (°F)	Spacing (Ft) Smooth Ceiling	Spacing (Ft) to Wall or Partition
AS2010-00 (a)	FT/ROR	D2	-	135-194	70	35
AS2020-00	FT/ROR	None	-	-	-	-
AS2021-00	FT/ROR	None	-	-	-	-
AS2035-00	FT/ROR	None	-	-	-	-
AS2036-00	FT	None	-	-	-	-
AS2037-00	FT	None	-	-	-	-
AS5500-450	FT	D2	-	131-194	50	25

Base Model	Related Detector	Control Unit Compatibility Restrictions
AS2050-00,AS2051-00, AS2049	AS2020-00, AS2021-00, AS2035-00, AS2036-00, AS2037	None
AS7002-00, AS7001-00	AS2010-00	B2

B2 - For connection to Listed control units with which compatibility was determined by test or a review of circuit parameters. Interconnection and compatible models indicated on installation wiring diagram for detector (base) and/or control unit.

D2 - For connection to Listed control units with which compatibility was determined by test or a review of circuit parameters. Interconnection and compatible models indicated on installation wiring diagram for detector (base) and/or control unit.

FT/ROR - Fixed temperature/rate of rise combination

FT - Fixed temperature

(a) - Detector may be set for FT [Mode 0], FT/15° ROR [Mode 1] or 15° ROR [Mode 2] Operation.

Last Updated on 2024-10-17

The appearance of a company's name or product in this database does not in itself assure that products so identified have been manufactured under UL Solutions' Follow - Up Service. Only those products bearing the UL Mark should be considered to be Certified and covered under UL Solutions' Follow - Up Service. Always look for the Mark on the product.

UL Solutions permits the reproduction of the material contained in Product iQ subject to the following conditions: 1. The Guide Information, Assemblies, Constructions, Designs, Systems, and/or Certifications (files) must be presented in their entirety and in a non-misleading manner, without any manipulation of the data (or drawings). 2. The statement "Reprinted from Product iQ with permission from UL Solutions" must appear adjacent to the extracted material. In addition, the reprinted material must include a copyright notice in the following format: "©2024 UL LLC."

UL Product iQ®

Audible-signal Appliances

COMPANY

Avenger Systems LLC
11586 Zagarolo Lane
Las Vegas, NV 89141 United States

S35913

Device	Model	Installation Location	Enclosure Ratings: Type Rating Per UL 50	Enclosure Ratings: IEC "IP" Rating
Accessories, Backboxes	AS4005-10	Indoor	—	—
Accessories, Enclosures	AS4008-10	Outdoor	—	—
Horns	AS4000-10	Indoor/Outdoor	—	—
Horn/strobes	AS4002-10	Indoor	—	—
Horn/strobes	AS4007-10	Indoor/Outdoor	—	—
Horn/strobes	AS4004-10	Indoor	—	—
Sounder Beacon	AS58000-011	Indoor/Outdoor	None	None

Model AS7005-00 - Low Frequency 520Hz Detector Sounder Base, Listed (UROX, File S35692) as an Audible Signal Appliance.

Last Updated on 2024-10-18

The appearance of a company's name or product in this database does not in itself assure that products so identified have been manufactured under UL Solutions' Follow - Up Service. Only those products bearing the UL Mark should be considered to be Certified and covered under UL Solutions' Follow - Up Service. Always look for the Mark on the product.

UL Solutions permits the reproduction of the material contained in Product iQ subject to the following conditions: 1. The Guide Information, Assemblies, Constructions, Designs, Systems, and/or Certifications (files) must be presented in their entirety and in a non-misleading manner, without any manipulation of the data (or drawings). 2. The statement "Reprinted from Product iQ with permission from UL Solutions" must appear adjacent to the extracted material. In addition, the reprinted material must include a copyright notice in the following format: "©2024 UL LLC."

FM Approvals

FM Approvals

Detection, Fire Alarm and Signaling Equipment | Fire Alarm Control Panels | Local Protective Signaling, Fire

Model Oasis analog addressable

Product Description

Model Oasis analog addressable fire alarm control panel with Software UL-1204-01 or greater

Models	***Description***
Oasis	Fire alarm Control; With an 5.25A Power Supply (S406): 120/240VAC input power, 0.915A AC (240VAC), 1.83A AC (120V) input power; With an 10.25A Power Supply (S408): 120/240VAC input power, 1.25A AC (240VAC), 2.5A AC (120V) input power; Maximum Standby Current: S406 PSU - 1.9A; S408 PSU - 3.4A; Maximum Alarm Current: S406 PSU - 4A; S408 PSU - 8A

Oasis Basic System Components and Modules are:

Main Back Board (S722)	Minimum functions: Provides slots for required and optional panel modules, as well as for field wiring and power supply terminations. Minimum functions of the Oasis Fire Alarm Control Panel are provided when Slot A of the Main Back Board contains System A Panel Module, Slot B contains System B Panel Module, and Slots C, D, E, or F contain a Dual Loop Panel Module. Two addressable loops are provided by the Dual Loop Panel Module in this configuration. Modules can be added, configured, and replaced without altering field wiring connections. This modularity allows each Oasis Fire Alarm Control Panel to be customized for a specific operation. Required modules for minimum operation of an addressable Oasis Fire Alarm Control Panel include System A Panel Module (S769); System B Panel Module (S770), Dual Loop Panel Module (S758); Other functions: - NAC terminals 1 to 4 provide 24 VDC @ 2.5 A. In the default state, these circuits can be connected as four Class B supervised outputs. However, they can be configured as two Class A or two Class B and one Class A output. - 5 configurable Relay outputs (Trouble, Fire, Supervisory and two programmable by default)
System A Panel Module (S769)	Its functions: - NAC 1 and NAC 2 Class A or two Class B. Default Class B. - NAC 3 and NAC 4 Class A or two Class B. Default Class B. - 2.5A per Channel (Max 5A combined) - PSU monitor Battery disconnected, power failure, battery low, PSU ground trouble, charger trouble. - Power fail input A connection of - Ground trouble

FM Approvals

System B Panel Module (S770)	Its functions: - AUX 24 Output 1 24V DC output @ 900mA - AUX 24 Output 2 24V DC output @ 900mA - Fire Routing Output 2 0V output in standby, switches to 24V when activated, requires End-of-Line (EOL) diode - Fire Routing Input Supervised input, requires 3.3K Ohm EOL resistor - Trouble Routing Output 24V output in standby, switches to 0V when activated, requires 3.3K Ohm EOL resistor - Trouble Routing Input Supervised input, requires 3.3K Ohm EOL resistor - Prog Routing Output Volt-free output measures 3.3K Ohms in standby, switches to 680 Ohms when activated - Prog Routing Input 1 Supervised input, requires 3.3K Ohm EOL resistor - Prog Routing Input 2 Supervised input, requires 3.3K Ohm EOL resistor - Fire Relay Volt-free contact rated at 30V DC, 1A, Resistive - Trouble Relay Volt-free contact rated at 30V DC, 1A, Resistive - Superv Relay Volt-free contact rated at 30V DC, 1A, Resistive - Programmable Relay 1 Volt-free contact rated at 30V DC, 1A, Resistive - Programmable Relay 2 Volt-free contact rated at 30V DC, 1A, Resistive
LCD Main Processor Board (S721)	Provides the touch display (Full color 800 x 480 LCD with resistive touch screen and automatic backlight dimming), central processing, and memory for the Oasis Fire Alarm Control Panel. The LCD Main Processor Board mounts to the fascia of the Oasis Fire Alarm Control Panel and includes hardware features such as connectors, ports, switches, LED indicators, and the internal buzzer
Dual Loop Panel Module (S758)	Monitors loop device status and provides status to the panel processor. It holds device configurations and operates in a standalone manner when catastrophic failures occur. The Dual Loop Panel Modules can be connected in any available slot (C-K) on the Main Back Board to provide this operating function SLC Loops rating (in/out)-- 36 VDC@400mA
Housings	4 Slot Standard Cabinet - 420mm (W) x 590mm (H) x 153mm (D), approximately 16.5in (W) x 23.2in (H) x 6in (D) 8 Slot Standard Cabinet - 540mm (W) x 720mm (H) x 160mm (D), approximately 21.3in (W) x 28.3in (H) x 6.3in
Standby Batteries with S406 PSU	Two 12 VDC, rechargeable, valve regulated, lead-acid, 60 AH Maximum
Standby Batteries with S408 PSU	Two 12 VDC, rechargeable, valve regulated, lead-acid,100 AH maximum
Optional Modules below:	
Network Module (S723)	Provides supervised, enhanced high-speed communication for networking up to a maximum of 128 fire control panels. The network provided by this module can support combinations of Oasis Fire Alarm Control Panels and Oasis Vision Annunciators.
Printer (S768)	Printer is an optional feature for printing fire system events as they occur
Zone LED Module (S771)	The Zone LED module contains 48 LEDs and is connected to the LCD Main Processor Board of the Oasis Fire Alarm Control Panel. A maximum of three Zone LED modules can be connected to provide the fascia with 144 Zone LED indicators

FM Approvals

16 Channel I/O Interface Card (S560)	Provides additional input and output capabilities to the Oasis Fire Alarm Control Panel for life safety control signals.. Inputs and outputs can be selected for up to 16 individual channels. All inputs and outputs are configured in the same way as devices connected to addressable loops of the panel. The 16 Channel I/O Interface can be configured to contribute or act upon cause and effect logic.
Vision Unit (S787)	The Oasis Network Vision Annunciator is a display and control unit which duplicates the indications and primary controls of Oasis Fire Alarm Control Panels connected to the same network. The Annunciator connects via the network interface, and any number of repeaters can be connected up to the maximum number of nodes allowed by the network. Comes in the following configurations: OVC00NC-10 (Red), OVC00NC-40 (Gray), OVC00NC-60 (Black)
Media Gateway™ Panel Module (S788)	Provides supervised connectivity to a remote monitoring center via Sur-Gard Fibro or dial-up. SIA is the recommended format for usage, but Contact ID is also supported. Transmission can be made through one or two telephone lines, and/or IP through Ethernet
8 Channel Relay Panel Module (S791)	The 8 Channel Relay Panel Modules have 8 voltage-free, unsupervised changeover relay contacts, each of which can be individually programmed
Extension Board (S786)	Provides connections for 4 additional modules to be used with the Oasis Fire Alarm Control Panel. In this type of configuration, the extension board is installed to the right of the Main Back Board on the back plate. Can only be used with the Eight slot cabinet models
NAC 4 Channel Panel Module	Class A Circuit (1 and 2 or 3 and 4); Class B (separate); 2.5A per channel (maximum 5A combined)

Compatible SLC Devices are:

Description	***Hochiki part #***	***Avenger part #***
Ionization Smoke Detector	AIE-EA	
Photoelectric Smoke Detector	ALG-V	
Heat Detector	ATG-EA	AS2003-00
Heat Detector, Fixed Temp, Rate of Rise	ATJ-EA	AS2010-00
Base, 4”	YBN-NSA-4	AS7001-00
Short Circuit Isolator Base 4”	SCI-B4	AS7003-00
Base, 6”	HSB-NSA-6	AS7002-00
Short Circuit Isolator Base 6”	SCI-B6	AS7004-00
Dual Input Monitor Module	DCP-DIMM	AS6007-00
Fast Response Contact Module w/ Pigtails	DCP-FRCME-P	AS6013-00
Fast Response Contact Module w/ screw terminals	FRCME-S	AS6002-00
Fast Response Contact Module, 4” sq box.	FRCME-4	AS6013-00
Fast Response Contact Module w/ Terminals, Miniature	DCP-FRCME-M	AS6024-10
Analog Addressable Duct Detector	DH-98A	AS5001-00

FM Approvals

Analog Addressable Duct Detector w/ relay	DH-98AR	AS5002-00
Short Circuit Isolator	DCP-SCI	AS6003-00
Dual Relay Module	R2M	AS6005-00
Analog Sounder Base, Aux Power	ASB	AS7008-00
Analog Sounder Base, Low Frequency, Aux Power	ASBL	AS7005-00
Supervised Output Module	SOM	AS6004-00
Conventional Zone Module	DCP-CZM	AS6011-00
Fast Response Contact Module, Class A	DCP-FRCMA	AS6020-00
Fast Response Contact Module, Class A w/ Short Circuit Isolators	DCP-FRCMA-I	AS6021-00
Fast Response Contact Module, Class A w/ Pigtails	FRCMA-P	AS6022-00
Fast Response Contact Module, Class A w/ Pigtails & Short Circuit Isolators	FRCMA-PI	AS6023-00
Dual Relay Module, 1 Amp	DCP-R2ML	AS6052-00
Dual Relay Module, 8 Amp	DCP-R2MH	AS6054-00
Dual Relay Module, 1 Amp w/ Short Circuit Isolators	DCP-R2ML-I	AS6053-00
Dual Relay Module, 8 Amp w/ Short Circuit Isolators	DCP-R2MH-I	AS6035-00
Supervised Output Module, Class A	DCP-SOM-A	AS6040-00
Supervised Output Module, Class A w/ Short Circuit Isolators	DCP-SOM-AI	AS6041-00
Supervised Output Module Release w/ Disable Keyswitch	DCP-SOM-R	AS6043-00
Addressable Manual Pull Station, Single Action w/ Cat 30 Key	DCP-AMS-KL	AS3032-10
Addressable Manual Pull Station, Single Action w/ Hex key	DCP-AMS	AS3031-10
Adressable Manual Pull Station, Dual Action w/ Cat 30 Key	DCP-AMS-KL-LP	AS3029-10
Adressable Manual Pull Station, Dual Action w/ Hex Key	DCP-AMS-LP	AS3030-10
Pull Station, Addressable, Single-Action	SG-32BK2-VG-B	AS3001-00
Pull Station, Addressable, Dual-Action	SG-32BK1-VG-B	AS3002-00
Analog Photoelectric Smoke Sensor	ALK-V	AS2005-00
Multi-Sensor	ACD-V	AS2014-00
Multi-Criteria Heat, Photo Sensor	ACC-V	AS2012-00
Multi-Criteria Heat, Photo Sensor	ACA-V	AS2008-00
Smoke Detector, Duct, Photoelectric	ALG-DH	AS2004-00
Smoke Detector, Duct, ALK	DH-99-A	AS5013-00
Smoke Detector, Duct, Relays, ALK	DH-99-AR	AS5014-00
Photoelectric Smoke Detector	ALN-V	AS2011-00
Remote Test Station for Duct Detectors – Alarm LED	MS-RA	AS5020-00

FM Approvals

Remote Test Station for Duct Detectors – Alarm LED w/ Reset Button	MS-RA/R	AS5021-00
Remote Test Station for Duct Detectors – Alarm LED w/ Reset Key Switch	MS-KA/R	AS5023-00

(See also CENTRAL STATION SIGNALING SYSTEMS.)

Details

Category	Local Protective Signaling, Fire
Class of Work	3010 - Fire Alarm Systems
Certification Type	FM Approved
Listing Country	United States of America

Company

Avenger Systems, LLC
11586 Zagarolo Lane, Las Vegas , Nevada 89141
United States of America
http://avengersystems.com

FM Approvals

Detection, Fire Alarm and Signaling Equipment | Fire Alarm Control Panels | Local Protective Signaling, Fire

Supreme RS

Product Description

Supreme RS-H Series Fire Alarm Control Panels. The Supreme RS Series controls use firmware revision 07.xxxx. The controls use 12AH to 18AH batteries for inside the panel mount and up to 60AH for remote cabinet mount. Below see the table for model number breakdown for the Supreme RS Fire alarm Control Panels:

AS08bc-d0

b = This is reserved for definition of the number of loops, defined by the numbers 1, 2, 3:
1 – 1 Loop Hochiki Protocol;
2 – 2 Loop Hochiki Protocol;
3 – 1 Loop Hochiki Protocol; non expandable;

c = This is reserved for definition of the type of Communication Board that is installed on the panel, defined by the numbers 0, 5, 6 and 7:
0 – No communicators installed;
5 – e-Net interface is installed;
6 – Integrated Dialer is installed;
7 - e-Net interface and Integrated Dialer are installed.

d = This is reserved for definition of the enclosure color, defined by the numbers 1, 4:
1 – Red enclosure
4 – Grey enclosure.

a = This is reserved for definition of the loop protocol, defined by the numbers 1, 2, 3 , 5, 6 and 7.
b = This is reserved for definition of the type of Communication Board that is installed on the panel, defined by the numbers 0, 1, 2, 3, 4, 5, 6 and 7 (see above).

Description	***Avenger part #***	***Hochiki part #***	***VES part #***
Ionization Smoke Detector		AIE-EA	VF2001-00
Photoelectric Smoke Detector		ALG-V	VF2002-00
Heat Detector		ATG-EA	VF2003-00
Fixed Temperature / Rate of Rise Heat Sensor	AS2010-00	ATJ-EA	VF2010-00
ALN-V Photoelectric Smoke Sensor	AS2011-00	ALN-V	VF2011-00
ACC-V Multi-Criteria Sensor	AS2012-00	ACC-V	VF2012-00
Base, 4”	AS7001-00	YBN-NSA-4	VF7001-00
Base, 6”	AS7002-00	HSB-NSA-6	VF7002-00
Dual Input Monitor Module	AS6007-00	DIMM	VF6007-00
Fast Response Contact Module w/ screw terminals		FRCME-S	VF6001-00
Fast Response Contact Module, 4” sq box.		FRCME-4	VF6002-00
Analog Addressable Duct Detector	AS5013-00	DH-99A	VF5013-00

FM Approvals

Analog Addressable Duct Detector w/ relay	AS5014-00	DH-99AR	VF5014-00
Short Circuit Isolator	AS6003-00	SCI	VF6003-00
Analog Sounder Base	AS7008-00	ASB	VF7008-00
Analog Sounder Base Low Frequency	AS7005-00	ASBL	VF7005-00
Supervised Output Module		SOM	VF6004-00
Conventional Zone Module	AS6011-00	CZM	VF6011-00
Fast Response Contact Module, Class A	AS6020-00	FRCMA	VF6020-00
Fast Response Contact Module, Class A w/ Short Circuit Isolators	AS6021-00	FRCMA-I	VF6021-00
Fast Response Contact Module, Class A w/ Pigtails	AS6013-00	FRCME-P	VF6013-00
Fast Response Contact Module, Class A w/ Pigtails & Short Circuit Isolators	AS6023-00	FRCMA-PI	VF6023-00
Dual Relay Module, 2 Amp	AS6052-00	DCP-R2ML	VF6052-00
Dual Relay Module, 8 Amp	AS6054-00	DCP-R2MH	VF6054-00
Dual Relay Module, 1 Amp w/ Short Circuit Isolators	AS6053-00	DCP-R2ML-I	VF6053-00
Dual Relay Module, 8 Amp w/ Short Circuit Isolators	AS6055-00	DCP-R2MH-I	VF6055-00
Supervised Output Module, Class A	AS6040-00	SOM-A	VF6040-00
Supervised Output Module, Class A w/ Short Circuit Isolators	AS6041-00	SOM-AI	VF6041-00
Addressable Manual Pull Station, Single Action, Hex Key	AS3031-10	DCP-AMS	VF3031-00
Addressable Manual Pull Station, Single Action w/ Cat 30 Key	AS3032-10	DCP-AMS-KL	VF3032-00
Addressable Manual Pull Station, Dual Action w/ Cat 30 Key	AS3029-10	DCP-AMS-KL-LP	VF3029-10
Addressable Manual Pull Station, Dual Action, Hex Key	AS3030-10	DCP-AMS-LP	VF3030-10
Analog Photoelectric Smoke Sensor		ALK-V	VF2005-00
Multi-Sensor	AS2014-00	ACD	VF2014-00
Remote Test Station for Duct Detectors – Alarm LED	AS5020-00	MS-RA	VF5020-00
Remote Test Station for Duct Detectors – Alarm LED w/ Reset Button	AS5021-00	MS-RA/R	VF5021-00
Remote Test Station for Duct Detectors – Alarm LED w/ Reset Key Switch	AS5023-00	MS-KA/R	VF5023-00
Short Circuit Isolator Base, 4”	AS7003-00	SCI-B4	VF7003-00
Analog Short Circuit Isolator Base, 6”	AS7004-00	SCI-B6	VF6024-00
Fast Response Contact Monitoring Mini Module	AS6024-00	FRCME-M	VF6024-00

Each of the models in the Matrix will be capable of interfacing with:

• eMatrix AS13xx-yyy

• eView Display AS1172-xx

• 16 Channel I/O AS1171-00

(See also CENTRAL STATION SIGNALING SYSTEMS, AUTOMATIC RELEASES FOR EXTINGUISHING SYSTEMS AND OTHER FIRE PROTECTION EQUIPMENT and AUTOMATIC RELEASES FOR PREACTION AND DELUGE SPRINKLER SYSTEMS).

FM Approvals

Details

Category	Local Protective Signaling, Fire
Class of Work	3010 - Fire Alarm Systems
Certification Type	FM Approved
Release Control Panel Grouping (For use with Solenoid Valves)	Group 4 - Rated 22.6W and below
Listing Country	United States of America

Company

Avenger Systems, LLC
11586 Zagarolo Lane, Las Vegas , Nevada 89141
United States of America
http://avengersystems.com

FM Approvals

Detection, Fire Alarm and Signaling Equipment | Fire Alarm Control Panels | Central Station Signaling Systems, Fire

Supreme RS

Product Description

Supreme RS-H Series Fire Alarm Control Panels. The Supreme RS Series controls use firmware revision 07.xxxx. The controls use 12AH to 18AH batteries for inside the panel mount and up to 60AH for remote cabinet mount. Below see the table for model number breakdown for the Supreme RS Fire alarm Control Panels:

AS08bc-d0

b = This is reserved for definition of the number of loops, defined by the numbers 1, 2, 3:
1 – 1 Loop Hochiki Protocol;
2 – 2 Loop Hochiki Protocol;
3 – 1 Loop Hochiki Protocol; non expandable;

c = This is reserved for definition of the type of Communication Board that is installed on the panel, defined by the numbers 0, 5, 6 and 7:
0 – No communicators installed;
5 – e-Net interface is installed;
6 – Integrated Dialer is installed;
7 - e-Net interface and Integrated Dialer are installed.

d = This is reserved for definition of the enclosure color, defined by the numbers 1, 4:
1 – Red enclosure
4 – Grey enclosure.

a = This is reserved for definition of the loop protocol, defined by the numbers 1, 2, 3 , 5, 6 and 7.
b = This is reserved for definition of the type of Communication Board that is installed on the panel, defined by the numbers 0, 1, 2, 3, 4, 5, 6 and 7 (see above).

Description	***Avenger part #***	***Hochiki part #***	***VES part #***
Ionization Smoke Detector		AIE-EA	VF2001-00
Photoelectric Smoke Detector		ALG-V	VF2002-00
Heat Detector		ATG-EA	VF2003-00
Fixed Temperature / Rate of Rise Heat Sensor	AS2010-00	ATJ-EA	VF2010-00
ALN-V Photoelectric Smoke Sensor	AS2011-00	ALN-V	VF2011-00
ACC-V Multi-Criteria Sensor	AS2012-00	ACC-V	VF2012-00
Base, 4”	AS7001-00	YBN-NSA-4	VF7001-00
Base, 6”	AS7002-00	HSB-NSA-6	VF7002-00
Dual Input Monitor Module	AS6007-00	DIMM	VF6007-00
Fast Response Contact Module w/ screw terminals		FRCME-S	VF6001-00
Fast Response Contact Module, 4” sq box.		FRCME-4	VF6002-00
Analog Addressable Duct Detector	AS5013-00	DH-99A	VF5013-00

FM Approvals

Analog Addressable Duct Detector w/ relay	AS5014-00	DH-99AR	VF5014-00
Short Circuit Isolator	AS6003-00	SCI	VF6003-00
Analog Sounder Base	AS7008-00	ASB	VF7008-00
Analog Sounder Base Low Frequency	AS7005-00	ASBL	VF7005-00
Supervised Output Module		SOM	VF6004-00
Conventional Zone Module	AS6011-00	CZM	VF6011-00
Fast Response Contact Module, Class A	AS6020-00	FRCMA	VF6020-00
Fast Response Contact Module, Class A w/ Short Circuit Isolators	AS6021-00	FRCMA-I	VF6021-00
Fast Response Contact Module, Class A w/ Pigtails	AS6013-00	FRCME-P	VF6013-00
Fast Response Contact Module, Class A w/ Pigtails & Short Circuit Isolators	AS6023-00	FRCMA-PI	VF6023-00
Dual Relay Module, 2 Amp	AS6052-00	DCP-R2ML	VF6052-00
Dual Relay Module, 8 Amp	AS6054-00	DCP-R2MH	VF6054-00
Dual Relay Module, 1 Amp w/ Short Circuit Isolators	AS6053-00	DCP-R2ML-I	VF6053-00
Dual Relay Module, 8 Amp w/ Short Circuit Isolators	AS6055-00	DCP-R2MH-I	VF6055-00
Supervised Output Module, Class A	AS6040-00	SOM-A	VF6040-00
Supervised Output Module, Class A w/ Short Circuit Isolators	AS6041-00	SOM-AI	VF6041-00
Addressable Manual Pull Station, Single Action, Hex Key	AS3031-10	DCP-AMS	VF3031-00
Addressable Manual Pull Station, Single Action w/ Cat 30 Key	AS3032-10	DCP-AMS-KL	VF3032-00
Addressable Manual Pull Station, Dual Action w/ Cat 30 Key	AS3029-10	DCP-AMS-KL-LP	VF3029-10
Addressable Manual Pull Station, Dual Action, Hex Key	AS3030-10	DCP-AMS-LP	VF3030-10
Analog Photoelectric Smoke Sensor		ALK-V	VF2005-00
Multi-Sensor	AS2014-00	ACD	VF2014-00
Remote Test Station for Duct Detectors – Alarm LED	AS5020-00	MS-RA	VF5020-00
Remote Test Station for Duct Detectors – Alarm LED w/ Reset Button	AS5021-00	MS-RA/R	VF5021-00
Remote Test Station for Duct Detectors – Alarm LED w/ Reset Key Switch	AS5023-00	MS-KA/R	VF5023-00
Short Circuit Isolator Base, 4”	AS7003-00	SCI-B4	VF7003-00
Analog Short Circuit Isolator Base, 6”	AS7004-00	SCI-B6	VF6024-00
Fast Response Contact Monitoring Mini Module	AS6024-00	FRCME-M	VF6024-00

Each of the models in the Matrix will be capable of interfacing with:

• eMatrix AS13xx-yyy

• eView Display AS1172-xx

• 16 Channel I/O AS1171-00

(See also CENTRAL STATION SIGNALING SYSTEMS, AUTOMATIC RELEASES FOR EXTINGUISHING SYSTEMS AND OTHER FIRE PROTECTION EQUIPMENT and AUTOMATIC RELEASES FOR PREACTION AND DELUGE SPRINKLER SYSTEMS).

FM Approvals

Details

Category	Central Station Signaling Systems, Fire
Class of Work	3010 - Fire Alarm Systems
Certification Type	FM Approved
Listing Country	United States of America
Release Control Panel Grouping (For use with Solenoid Valves)	Group 4 - Rated 22.6W and below

Company

Avenger Systems, LLC
11586 Zagarolo Lane, Las Vegas , Nevada 89141
United States of America
http://avengersystems.com

Avenger Approvals

عقد توريد نظام الاطفاء بغاز FM200 لمشروع إنشاء معهد ريادة الأعمال بالرياض

إنه في يوم الاثنين الموافق ٢٠١٨/٠٦/٢٥ م تم الاتفاق بين كل من:

الطرف الأول: شركة الراجحي للبناء والتعمير عنوانها الرياض، ص. ب ٣٥٠٠٩ سجل تجاري:١٠١٠٠٨٩٨٠٨

هاتف: ٤٢٣٥٠٦٨ فاكس: ٤٢٣٥٠٦٨ يمثلها المهندس/ عبدالله عبدالمحسن العصيمي.

الطرف الثاني: شركة أعمال المقاولين للتجارة والمقاولات وعنوانها الرياض – حي الفاروق طريق المدينة المنورة – مقابل العويضة ، ص ب ٤١٢٠٨ ، الرياض ١١٥٢١ ، سجل تجارى : ١٠١٠١٤٢٤٩١ ، هاتف :٤٧١٣١٧٦ فاكس :٢٤٢٠١٤٠ ويمثلها في التوقيع المدير التنفيذي / المهندس مجدى عبد العزيز

مقدمة:

حيث أن الطرف الأول المقاول الرئيسي لمشروع إنشاء معهد ريادة الأعمال بالرياض (المالك: المؤسسة العامة للتدريب التقني والمهني) ومن متطلباته نظام الإطفاء بغاز FM200 وحيث أن الطرف الثاني يمتلك شركة لتوريد الأعمال المطلوبة وتوابعها وبناء عليه أبدى الطرف الثاني استعداده وقبوله للقيام بتوريد المواد موضوع العقد وقد اتفق الطرفان وهما بكامل الأهلية الشرعية والنظامية على ما يلي:

مادة (١) مقدمة العقد:

تعتبر مقدمة هذا العقد جزء لا يتجزأ منه.

مادة (٢) وثائق العقد:

تعتبر الوثائق التالية جزءاً لا يتجزأ من هذا العقد، ويرجع إليها في كل ما لم يرد عليه النص في هذا العقد:

١- هذا العقد.

٢- خطاب اعتماد الغاز لغرفة الارشيف والداتا رقم٦٦٠٣٥/٤٣وتاريخ ١٤٣٩/٠٤/١٥ هـ .

٣- خطاب الاعتماد من المالك – المؤسسة العامة للتدريب التقني والمهني رقم ١٦٩٥٠٤/٤٣ وتاريخ ١٤٣٨/١٢/٠١هـ وخطاب اعتماد المواد رقم ١٤٣٧٣٥/٤٣ وتاريخ ١٤٣٩/٠٩/١٢ هـ.

٤- عرض السعر المقدم من الطرف الثاني برقم QT22532-11-17REV05وتاريخ ٢٠١٨/٠٦/٢٤م.

٥- تعتبر جميع الوثائق والمستندات المذكورة أعلاه والمرفقة بالعقد تمثل وحدة واحدة وتفسر بعضها بعضا وفي حال وجود أي تعارض تسود الوثيقة التي تأتي أولا حسب الترتيب أعلاه.

مادة (٣) موضوع العقد:

أن يقوم الطرف الثاني بتوريد نظام الإطفاء بغاز FM200 حسب العينات والمواصفات المعتمدة من المالك بموجب الشروط والأسعار والأحكام المدرجة في هذا العقد، وهي نفس الغاية من أعمال العقد حيث يجب أن تكون المواد الموردة حسب المواصفات المطلوبة وتخضع للموافقة من قبل الإدارة أو المهندس أو الطرف الأول وبيانها حسب خطاب المالك والعينات المعتمدة .

مادة (٤) نطاق الأعمال Scope of Works المطلوب من الطرف الثاني:

١- تقديم المواصفات مع العينات للطرف الأول لاعتمادها من المالك وعلى الطرف الثاني تقديم التوضيحات اللازمة والمراجعة لاستيفاء أي ملاحظات أو تعديلات حال طلبها من المالك وعلى الطرف الثاني مراجعة الجهة المختصة لدى المؤسسة العامة للتدريب التقني والمهني لإنهاء كامل الاعتمادات.

2018/6/

Owner:	Consultant:	Contractor:
عقارات الخليج Gulf Real Estate Closed Joint Stock Company	اتحاد المستشارين CONSOLIDATED CONSULTANTS	ادكس للمقاولات والصيانة والتشغيل ADEX Contracting Maintenance & Operation

PROJECT: Olaya Lifestyle Retail Riyadh

SUBMITTAL FORM (SHOP DRAWING) (SMS)

SUBJECT: FM200 FIRE SUPPRESSION SYSTEM DRAWINGS

Discipline: ☐ Arch ☐ Civil ☑ Mech. ☐ Elect ☐ HVAC ☐ LS

Specs. Code	IFC DWG Ref.	Submittal no:	RLF-OLS-M-SD-061-Rev.00
21 20 00 - PRE ENGINEERED FIRE SUPPRESSION SYSTEM	--	☑ New sub ☐ Re-submitted	1st sub date: 20-09-2022 Present sub date: Previous sub date:

ITEM NO	DOCUMENT NUMBER	TITLE	REV	APPROVED CODE	SUBMITTAL SCHEDULED DATE
1	OLS-SD-M-FM200-SVR-101	SERVER ROOM (B1-15)	00		
2	OLS-SD-M-FM200-ELR-102	ELECTRICAL ROOM (GF-15)	00		
3	OLS-SD-M-FM200-RMR-103	RMU ROOM (GF-17)	00		

Sub-contractor Name:

Contractor's Comments:

01 SET / 02 CDs

See Attachment ☐

Note: This review does not relieve the contractor of his responsibilities under the terms of the contract nor authorize additional compensation. Contractor Signature: Date: 20-9-2022

Consultant's Comments:

Refer comments sheet. (Attached)

Refer to Comments on attached A4 sheet.

See Attachment ☑

Construction Manager & Client Comments:

See Attachment ☐

Status: A ☐ Approved B ☑ Approved as noted C ☐ Revise and submit D ☐ Rejected E ☐ No Action

Sign & Date	Consultant	Construction Manager	Client
☐ Arch ☐ Civil ☐ Mech ☐ Elec ☐ HVAC ☐ LS	Sign: Date: 20/9/22	Sign: Date: 21/09/2022	Sign: Date: 21-9-2022

Cc : Project Manager ☐ Received .....

اتحاد المستشارين للهندسة والبيئة
Consolidated Consultants
Received
Date: 20/09/2022
9:50 Am

Received 2:00 pm 21/09/2022

Doc. Ref: CSF08a/3
Issue Date: 11 spt. 2019

عقارات الخليج
Gulf Real Estate
Closed Joint Stock Company

اتحاد المستشارين
CONSOLIDATED CONSULTANTS

ادكس للمقاولات والصيانة والتشغيل
ADEX Contracting Maintenance & Operation

Consultant's Comments

Subject: **FM200 System Shop Drawings**
Submittal No.: OLS-SD-061-R0
Submission Date: 20TH Sep 2022
Approval Status: B-Approved as Noted

1. All the pipes should be seamless schedule-80, confirming to ASTM A106.
2. Nozzle location to be in accordance with respective room's equipment layout.
3. Integrate ventilation system with FM200 system.
4. Final approval is subject to acceptance by civil defence.

Reviewed by:
20/09/2022
Anwar Quadri
Mechanical engineer – CCG

21/09/2022

عقارات الخليج
Gulf Real Estate
Closed Joint Stock Company

إتحاد المستشارين
CONSOLIDATED CONSULTANTS

ادكس للمقاولات والصيانة والتشغيل
Contracting Maintenance & Operation ADEX

OLAYA LIFE STYLE RETAIL

SUBMITTAL NO.: RLF-OLS-M-SD-061-REV.00 **DATE: 20-SEPT-2022**

DESCRIPTION: *FM200 fire suppression system drawings (Server room at B1, RMU Room and Electrical Room at GF).*

Electrical Consultant Comments:

1. FM200 control panel shall be provided with battery backup minimum of 24-hours with 5-mins alarm.
2. System shall interface with the fire alarm system to indicate: -
   a. System operational Status
   b. System stage alarm
   c. System discharging
   d. Common fault alarm
3. FM 200 cabling shall be fire resistant FP 200 cables
4. Wiring for all bell circuits shall be minimum 2.5 mm2 and wiring for all signaling circuits shall be minimum 1.5 mm2.
5. Contractor shall provide a power from the emergency source. Wiring for 230 V AC power to each FM200 CP shall be minimum 2.5 mm2.
6. All exposed conduit shall be GI conduit. Pull box shall be accessible if above the false ceiling, below raised floor and any other area.
7. FM 200 contractor shall submit material submittal for the Conduit, boxes and wiring for approval or use the same material approved for main contractor (ADEX).
8. FM200 system shall be interfaced with HVAC equipment for the dedicated room. The operation of HVAC shall be as per approved sequence of operation.
9. Sequence of operation shall comply with project specification section 21 20 00, Part-3.1 and subject to mechanical engineer approval.
10. Testing and commissioning of clean agent system as required by NFPA 2001 for approval of systems.
11. Contractor shall submit method statement of FM200 system with all supported documents.
12. Comments on material submittal RLF-OLS-M-MT-068 shall also be complied.
13. Final approval of FM200 system subject to acceptance of local Civil defense authority.

****

20/9/2022

Owner:	ADVANCED LEARNING SCHOOL	Client:
شركة التعليم المتطور ADVANCED LEARNING COMPANY ALC		الخليجية للإستثمار والتنمية AL KHALIJYAH INVESTMENT & DEVELOPMENT
Consultant		**Contractor:**
DAR AL-OMRAN		ادكس للمقاولات والصيانة والتشغيل ADEX Contracting Maintenance & Operation

MATERIAL SUBMITTAL FORM

Submittal Number:	301-ALS-ADX-DAO-MAR-M-00311	Original Submittal Date:	08-06-2023
Submittal Revision:	R0	Previous Submittal Date:	
		Present Submittal Date:	

☐ Civil ☐ Structural ☐Architectural ☐ Electrical ☒ Mechanical ☐ General ☐ Interior ☐Urban/ Planning ☐ Landscaping

No.	Material	Manufacturer	Supplier	Country of Origin
1	FM 200 & CO2 FIRE FIGHTING SYSTEM	AVENGER - LUXEMBURG	CSC CO.	AS PER PART LIST
	SUPPLY, INSTALLATION & CALCULATION			

Specification References / BOQ Reference	Drawing Reference /Location / Use
DIV.15	THROUGHOUT FIRE FIGHTING PROJECT DRAWINGS
ITEMS (AS PER COMPLY STATEMNT)	

Information submitted and attached:

- ☒ Certificates
- ☒ Technical Brochure / Catalos
- ☒ Manufacturer's Data & Specs.
- ☐ O & M Manual
- ☐ Spare Parts List
- ☐ As Built Drawings
- ☐ Samples
- ☐ Warranty
- ☐ Others ()

Approval Status

Action Code: B

- ☐ A-Approved
- ☒ B - Approved with Comments
- ☐ C- Revise & Resubmit
- ☐ D- Rejected
- ☐ E- No Action

Contractor:

Project manager: Bashar Zidan
Signature:
Date: 08/6/2023

ادكس للمقاولات والصيانة والتشغيل Advance Learning School ADEX Contracting Maintenance & Operation

DAO Comments:

- Refer to the Comments on the attachments (1 Page)

Comments

(Print) Name: M. Bakhit Position: Mech. Eng Signature: Date: 13-6-2023

DAO Representative: (Print) Name: ~~Ahmad Hadis~~ Hosam Aly **Signature:** 13/6/2023

Position: Resident Engineer **Date Returned:**

Contractor signature **Receive for** **Date:**

This review does not relieve the contractor of his responsibilities under the terms of the contract nor authorize additional compensation.

Consultant:	ADVANCED LEARNING SCHOOL	Client:
دار العمران DAR AL-OMRAN		AL KHARJIYAH
شركة التعليم المتطور ADVANCED LEARNING COMPANY ALC		Contractor: ادكس ADEX

ATTACHMENT TO SUBMITTAL			
Submittal No.	301-ALS-ADX-DAO-MAR-M-00311	Submittal Date:	2023-06-13
Submittal Revision	R0		

DAO Comments:

Project : Advanced Learning School
Date: 14 / 06 / 2023
Dar Al Omran Engineering Consultants
C.R. 1010423886
A-Approved, B-Approved, With Comments C-revise and Resubmit D: Rejected, E-No Action

FM200 & CO2 FIREFIGHTING SYSTEM:

1- Final approval from the Client.
2- Certificate of warranty from the initial delivery of the project 3 years.
3- Compliance with the attached project specifications, any violation of the specification is the responsibility of the contractor and supplier.
4- The supplier is responsible for the installation, commissioning, testing, and compliance of materials with Civil Defense and NFPA requirements.
5- Submit Operation and Maintenance data, certificate, Origin and spare parts list.
6- Submit VO before to delivery and installation.
7- Any delay on the responsibility of the contractor.
8- Coordination with the electrical.
9- Justification attached letter in page (3)

(Print) Name: Mohammed Bakhit Position: Mech.Eng. Signature: Date: 13/06/2023

DAO Representative: Hosam Aly	Signature:
Position: Project Architect / Director	Date Returned: 13/6/2023

Shop Drawing

Ref. No: ALMA-SD-2025-02-R01	Date: 22-05-2025
Project No.: 1382 - 1384	ITP No. & Item No.:
Supervision Consultant: CSI	Contractor: ALMA HILLS FOR FIRE SOLUTIONS
Subject: SD for FM-200 Control Room in WH01-04	

Scheduled Inspection Details

This section is completed by the Contractor and copied to the Supervising Consultant 24 hours prior to the proposed inspection

Civil ☐	Structural ☐	Architectural ☐	Mechanical ☒	Electrical ☐
HVAC ☐	Plumbing ☐	Lifts ☐	Utilities ☐	Fire Life & Safety ☐

Level :		Location :	WH01-04
Inspection Date :	22-05-2025	Inspection Time :	10:00 PM
Drawing Ref. :		Attachments :	
Testing Requirements: SD for FM-200 Control Room in WH01-04			
Submitted by (Name) :		Submitted by (Signature) :	

Contractor Inspection

This section is completed by the Contractor and handed to the Supervising Consultant prior to the inspection

Comments :

The Contractor confirms that the work presented for inspection has been executed as per the approved drawings, specifications, materials, method statements and quality plan.

Contractor Construction Manager : Eng: Sati Sign :	Contractor QC Manager : Eng: ABDUL RAHEEM Sign :

Supervising Consultant Inspection

Comments :

1. Rigid support to be provided in each change of direction, near to the cylinder outlet and near to the nozzle to prevent the pipe movement due to thrust forces occurs during the gas discharge

Does the work presented for inspection fully comply with the approved drawings, specifications, materials, method statements and quality plan?

Approved ☐ Approved with Comments ☑ Revise&Resubmit ☐ Rejected ☐

Inspector's Name : Eng.Jamsheer Kappakunnan	Inspector's Signature :	Date : 24/05/2025

Shop Drawing

Ref. No: ALMA-SD-2025-02	Date: 18-05-2025
Project No.: 1382 - 1384	ITP No. & Item No.:
Supervision Consultant: CSI	Contractor: ALMA HILLS FOR FIRE SOLUTIONS
Subject: SD for FM-200 Communication Room in WH01-04	

Scheduled Inspection Details

This section is completed by the Contractor and copied to the Supervising Consultant 24 hours prior to the proposed inspection

Civil ☐	Structural ☐	Architectural ☐	Mechanical ☒	Electrical ☐
HVAC ☐	Plumbing ☐	Lifts ☐	Utilities ☐	Fire Life & Safety ☐

Level :		Location :	WH01-04
Inspection Date :	18-05-2025	Inspection Time :	10:00 PM
Drawing Ref. :		Attachments :	
Testing Requirements: SD for FM-200 Communication Room in WH01-04			
Submitted by (Name) :		Submitted by (Signature) :	

Contractor Inspection

This section is completed by the Contractor and handed to the Supervising Consultant prior to the inspection

Comments :

The Contractor confirms that the work presented for inspection has been executed as per the approved drawings, specifications, materials, method statements and quality plan.

Contractor Construction Manager : Eng: Sati Sign :	Contractor QC Manager : Eng: ABDUL RAHEEM Sign :

Supervising Consultant Inspection

Comments :
1. Ensure the design complies with NFPA 2001 (latest edition), local civil defense regulations.
2. General notes are not clear to read, provide clear file.
3. Dimensions for the room to be provided
4. Confirm integration with BMS, fire alarm system, HVAC shutdown, door release, and power isolation as applicable
5. Typical installation details for control panel, manual release, detectors, Bell, flasher, piping and supports are missing.

Does the work presented for inspection fully comply with the approved drawings, specifications, materials, method statements and quality plan?

Approved ☐ Approved with Comments ☐ Revise&Resubmit ☑ Rejected ☐

Inspector's Name : Eng. Jamsheer Kappakunnan	Inspector's Signature :	Date : 19/05/2025

Client:	project: ALBASATEEN OFFICES	Consultant:	MEP Contractor
Al Shegrey Group KAS Investment		WD CONSULTING — Walid A. Al Dubaikel Engineering Consulting Co.	APT

MATERIAL SUBMITTAL	TRM NO.	CONT	PROJ	PART	TRADE	NO	REV
		APT	ABO	SAM	ME	25	02

To: Consultant Technical Office	From: MEP Contractor Technical Office
Attention: Eng. MOHAMED EISA	By: Eng. MOHAMED Hamed

☐ Civil ☐ Arch ☐ Electrical ☑ Mechanical ☐ Others

1. Material Description: Date: 06/01/2025

FM-200 SYSTEM (AVENGER)

Area of Application:	ALL PROJECT AREA	Design Type :	FM-200 SYSTEM
Plot :		B.O.Q. Ref. No. :	
Drawing Ref. :	FM-200 SYSTEM	Material Color :	
ITEM NO BOQ	Discription		Supplier Approval
			AL-ALYAA
Specification Ref. :		Material code:	

2. MANUFACTURER/SUPPLIER :

Company Name :	AVENGER / CSC / AL-ALYAA		
Address :	Riyadh	Tel No.	
Approved TRM No. :	APT-ABO-SAM-MECH-025-R2		
Local Agent :			
3. DELIVERY :			
Country of Origin :			

Availability: ☑ Locally Manufactured ☐ Overseas

We certify that the above submitted items have been reviewed in detail and are correct and in strict conformity with the contract drawings and specifications except as otherwise stated; the submitted items in conformity with the above and deliver same timely. Also that the material sources indicated above have been reviewed in detail and that they will supply

Submitted By:	Eng.Mohamed Hamed	Signature:	Date:	06/01/2025

FM-200 manufactured by AVENGER Systems (USA) is acceptable with following notes.

Tech.Support Engineer : * Submit Method Statement & TKC procedure with MIR.

Sign : Date : 09/01/25

3.Tech. Support Comments : * Submit all certificates / warranties

(1) All pipes must be ERW Gal. Steel, Sch. 40. Grade A, ASTM 53. & use rigid supports.

(2) Manifold. Sch. 80. Black Seamless Threaded Galvanized for 2" and below. & Welded for 2½ & above.

(3) Fittings. For sizes 50 mm Ø & Below are ASTM M65 Galv/Forged steel Threaded 3000, For sizes 65 mm Ø & above are grooved painted red.

- ☐ A- Approved
- ☐ B- Approved As Noted
- ☐ C- Revise & Resubmit
- ☐ D- Rejected
- ☐ Sample Required
- ☑ Tests Required
- ☐ Additional Info. Required
- ☐ Manufacturer'sGuarantee Required

* All pipe size shall be based on approved hydraulic calculations.
* All standard sizes of U-Bolts/Clamps, washers, nuts shall be as per NFPA Codes & Elect. approved.
* All system components, data sheets, calculations & drawings to be submitted for Civil defense department for final approval.
* All equipment shall be UL/FM approved.
* Submit schematics & sequence of operation for system

Consultant Tech. Engineer : Sign : Date :

Consultant Project Manager : Sign : Date :

Client Tech. Engineer : Sign : Date :

Client Tech. Project Manager : Sign : Date :

AMIC

CONSULTING — CODE — Approved — Approved As Noted — Revise & Resubmit — Not Approved — Rejected — Date — By — Approval does not relieve the contractor of any responsibility under the contract or of any other obligation. Contractor is responsible for coordination with other trades

RECEIVED 06 JAN 2025 — Walid A. Al Dubaikel Engineering Consulting Co.

PRSD Submittal Revision

Submittal

General

Project Name:	EMERGING PHARMACEUTICAL SITE READINESS	Project Number:	C/0081/23
Contract No:	C/0081/23	Contractor:	RITEC
Submittal Record #:	SBMT-C/0081/23-0131	Rev#:	2
Creator:	Khalid Hussein	Creation Date:	10/16/2024 05:13 AM (UTC-8)
Status:	Completed	Trade:	Mech

Submittal Details

Submittal Title:	FM 200 SYSTEM	Specify:	
Submittal Description:	FM 200 SYSTEM	Ref. No.:	

Submittal Type

Drawing: No	Material: Yes	Samples: No	Catalogue: No
Mockup: No	Other: No	Specify:	

Contractors Remarks

Remarks:		Contractor, Project Manager:	
Enclousures Returned:	No	Attached Remarks:	No

Reviewed By PRSD Engineers

Comment:	Action Code: B The manufacturer AVENGER for FM200 is acceptable. The contractor is to submit a complete Consolidated Report for each system including a complete layout by the specialized company CSC.
Date:	10/17/2024
PRSD Engineer Name / Signature:	Arturo Ongoco

Reviewed By PMD PM

Comment:	
PRSD Project Manager:	Jessie Laya

Revision Decision

Revision Action(s): B – Approved as noted. (Work may proceed, res)ubmission not required	Decision Date: 10/19/2024 08:53 PM (UTC-8)

Revision Items

1 Item(s)

No.	Sm	Item Description	Trade	Item Action
001		Avenger HFC227ea FM200 System (Profile)	Mech	B

Record - General Comments

1 Item(s)

Comment Date	Created By	Company
10/17/2024 06:22 AM (UTC-8)	Arturo Ongoco	KFSHRC

Comment Text
Action Code: B The manufacturer AVENGER for FM200 is acceptable. The contractor is to submit a complete Consolidated Report for each system including a complete layout by the specialized company CSC.

1 Item(s)

File Name	Title	Revision No.	Size	Issue Date
KING FAISAL SPECIALIST HOSPITAL.pdf			46 MB	

Comment Date	Created By	Company

Comment Text

Attachments

<Revision Items> - Line item - details

Line Item No: 001

General

Item No.:	
Description:	Avenger HFC227ea FM200 System (Profile)
Trade:	Mech
Line Item Status:	B

Please Use the Up Comment Tap

Steps to fill the submittal form:1- Open attachment link below2- Select attachment3- Click comment above4- Fill your comment5- For action code: Please Fill this Item status from this wizard A/C:A or A/C:B or A/C:C or A/C:D or A/C:E

Attachments (1) **Linked Records (0)** **Linked Mail (0)**

REQUEST FOR INFORMATION

Project Name:	SAFIRA RAK FABRICATION YARD	**Project Location:**	Ras Al-Khobar, Kingdom Of Saudi Arabia
Project Number:	245-1-18	**Client:**	MCDERMOTT

Block I

RFI No.:	**Subject:**	**Date:**
D7365-RFI-MDR-ZP-FF-001	Clean Agent Fire suppression system	7/1/2024

Location/Area: all packages

TOS:

Information Requested:

In Reference to IFC drawings for package 4 & 5 ,clean agent fire suppression is required to be installed in specified rooms.However since there is no specifications for the subject system ,Zamil is hereby proposing the following brand :

brand Name: Avenger
Proposed clean agent :Avenger 5112 (FK-5-1-12 chemical name as per NFPA 2001)
Approvals: UL Listed /FM approved

please check and confirm to proceed furthur for design and shop drawings for this system .

Attachments:
1. Avenger technical submittal

REQUEST FOR INFORMATION

Project Name:	SAFIRA RAK FABRICATION YARD	**Project Location:**	Ras Al-Khobar, Kingdom Of Saudi Arabia
Project Number:	245-1-18	**Client:**	MCDERMOTT

Block II

RFI No.:	**Subject:**	**Date:**
D7365-RFI-MDR-ZP-FF-001	Clean Agent Fire suppression system	7/1/2024

Location/Area: all packages

TOS:

Reference(s):

1.Avenger technical submittal

Attachment(s): ☑ **Yes (List)** ☐ **No**

Response Required By Date:

Requested By:

Mahmoud Kishly	Mechanical Engr	M. Kishly	7-Jan-24
Print Name	**Function**	**Signature**	**Date**

REQUEST FOR INFORMATION

Project Name:	SAFIRA RAK FABRICATION YARD	**Project Location:**	Ras Al-Khobar, Kingdom Of Saudi Arabia
Project Number:	245-1-18	**Client:**	MCDERMOTT

RFI No.:	**Subject:**	**Date:**
D7365-RFI-MDR-ZP-FF-001	Clean Agent Fire suppression system	7/1/2024

Location/Area: all packages

TOS:

Block III

Time/Date Received:

Recommended Action:

- The proposed suppression system is approved.
- MDR Approval is on the consideration that the suggested system meets the Approval requirements of HCIS.
- Performance of the selected system shall be inline with the Warranty requirements.

MDR urgent reply on requested information will be highly appreciated.

Cost Impact:	☐ Yes	☑ No	☐ Unsure
Schedule Impact:	☐ Yes	☑ No	☐ Unsure

Attachment(s): ☑ Yes (List) ☐ No

Transmit a Copy of this RFI to the Client?	**Yes**	**No**
	☑	☐

REQUEST FOR INFORMATION

Project Name:	SAFIRA RAK FABRICATION YARD	**Project Location:**	Ras Al-Khobar, Kingdom Of Saudi Arabia
Project Number:	245-1-18	**Client:**	MCDERMOTT

Block IV

RFI No.:	**Subject:**	**Date:**
D7365-RFI-MDR-ZP-FF-001	Clean Agent Fire suppression system	7/1/2024

Location/Area: all packages

TOS:

Distribution:

- [x] Site Construction Manager
- [ ] S/C Administrator
- [ ] QA/QC Manager
- [ ] Craft Superintendent
- [ ] Project Controls Manager
- [ ] Technical Specialist
- [x] Engineering

Signed:

Print Name	Function	Signature	Date
Mansoori MR	Engineering-Lead	MMR	11 February 24

شركة العماد العربي للاستشارات الهندسية (ايكون)
Alemad Alarabi Engineering Consultancy Company (AECON)

أعمال سنمار
Sinmmar Business

Material Submittal طلب اعتماد المواد

اسم المشروع: الأعمال الميكانيكية لهيئة كفاءة الإنفاق والمشاريع الحكومية الجديدة

☑ طلب جديد — رقم طلب الاعتماد: EP-MS-MECH-005 — تاريخ الطلب: 3/2/2025

☐ طلب معاد تقديمه — رقم الطلب السابق: — تاريخ الطلب السابق:

سبب تقديم طلب الاعتماد: ☐ من أجل معلومات ☐ من أجل الملاحظات والتعليقات ☑ من أجل الاعتماد

التخصص:

☐ معماري ☐ مدني ☑ ميكانيكا ☐ كهرباء ☐ تيار خفيف ☐ امن وسلامة ☐ اخرى .....

المرفقات:

☑ كتيب المورد ☐ مخططات ☑ المواصفات الفنية ☐ شهادات ☐ عينات ☐ ملف الاستئناف ☐ اخرى .....

جدول المواد:

م	الوصف	المصنع	المورد	رقم البند المرجعي	ملاحظات
1	FM200	Avenger	شركة CSC	1/6-1/7	B
	FM200	Hochiki	شركة Eco line	1/6-1/7	C

المهندس المقاول:
الاسم: بشار المعايطه التوقيع:
الوظيفة: التاريخ: 3-2-2025

مدير المشروع المقاول:
الاسم: فادي بو عرم التوقيع:
التاريخ: 3-2-25

نتيجة الطلب:

A معتمد بدون ملاحظات — (B) معتمد مع ملاحظات إعادة التقديم غير ضرورية — C معتمد مع ملاحظات ويجب إعادة التقديم — D غير معتمد (مرفوض)

الملاحظات:

1 لا مانع من اعتماد Avenger طبقا لتوريد كما ورد بالموقع.
2 التصميم يتم أن يتم تقديمه مع ملاحظات اذا وجد بالمورد.
3 جميع المواد يجب أن تكون جديدة.
4 الاعتماد مبدئي ولا نتحمل مسئولية القادم.

المهندس المختص / الاستشاري:
الاسم: التوقيع:
الوظيفة: التاريخ:

مدير المشروع / الاستشاري:
الاسم: عبد الله ابراهيم التوقيع:
التاريخ: 2/2/25

المهندس المختص / المالك:
الاسم: التوقيع:
الوظيفة: التاريخ:

مدير المشروع / المالك:
الاسم: عبد الله محمد السبت التوقيع:
التاريخ: 2025/2/7

TAWAL

USCO AVENGER

Product Approval Form

Civil	Structural	Architectural	Mechanical	Electrical	Telecom

Supplier Name : Contractors Services Co

Submittal No. : -
Date : 1-Jun-2023
Project Title : TAWAL Projects
Package Name : FireIghting System
Revision : -
No. of Copies : -
Vendor : -

Description:	AVENGER - HFC227ea System (Trading name FM200) Using for Capex Rooms
Product Information:	Site Model: / Tower Type: / Total EPA: / Site Dim. : Num. of Tenant's: / Tower Capacity: / Tower Height: / HVAC : Shelter/ODU : / Power Sup: / Rectifiers : / Battery : IBS: / Connectivity: / Small Cell: / WiFi : Planned Inspection Date: 27-Jul-2023

Attention :

For : Contractors Services Co

Date : 27-Jul-2023 Name: Engr.Bahaa Zuhair Signature :

Mobile: 547078789 Stamp :

For : TAWAL – Telecommunications Towers Company Ltd

Approval Codes :

- [x] A APPROVED
- [ ] B APPROVED with comments, Incorporate Comments & Proceed
- [ ] C REJECTED

Comments :

Signature : TAWAL - Design Director	Signature : TAWAL - GM / ES & OP Planning
Name : Alhassan Bin Saleh	Name : Naif Salem Alenazy
Date :	Date :
Signature : 10-10-2023	Signature :

TAWAL

USCO

AVENGER

Technical Sheet

☐ Tower ☐ Shelter / ODU ☐ Power Supply ☐ Battery ☐ Rectifiers ☐ HVAC

Supplier Name	:	Contractors Services Co
Submittal No.	:	-
Date	:	1-Jun-2023
Project Title	:	TAW TAWAL Projects
Package Name	:	Fire Fire Fighting System
Revision	:	-
No. of Copies	:	-
Vendor	:	-

Description and efficiency:

1. GAS CYLINDER & STAINLESS STEEL VALVE ASSEMBLIES UL/FM APPROVED
2. FM-200 Fire suppression agent UL/FM APPROVED
3. LATCHING SOLENOID ACTUATORS UL APPROVED
4. LOCAL MANUAL CONTROL HEAD FOR 383L018 UL APPROVED
5. PRESSURE SUPERVISORY SWITCH (N/C) 360 PSI UL APPROVED
6. NOZZLES (ALUMINUM) UL APPROVED
7. CAUTION-ROOM PROTECTED UL APPROVED
8. Supreme XT Conventional Releasing Panel Red 230V UL
9. Supreme XT Abort Switch Surface Mount Red UL APPROVED
10. Manual Pull Station SPST w/TB Dual Action Key Lock Yellow for Releasing UL APP
11. Back Box for Manual Pull Station, Yellow Color UL APPROVED
12. FIXED TEMPERATURE HEAT DETECTOR UL APPROVED
13. Conventional Photo Electric Smoke - H UL APPROVED
14. Conventional 4 inch base - H UL APPROVED
15. 24V DC Fire Alarm Bell -6 Inch UL APPROVED
16. Horn/Strobe, Wall Red Multi Candela (GEC3) UL APPROVED

Signature :

Reviewed by		Approved by	
Name	: Adel Arpto	Name	: Kareem R. Elmallah
Date	: 9-10-2023	Date	: 10-10-23
Signature	:	Signature	:
Job Titel	: E&M Expert	Job Titel	: Design Manger

TAWAL

USCO AVENGER

Complaince Terms & Condtions

☐ Tower	☐ Shelter / ODU	☐ Power Supply	☐ Battery	☐ Rectifiers	☐ HVAC

Supplier Name	:	**Contractors Services Co.**
Submittal No.	:	-
Date	:	1-Jun-2023
Project Title	:	TAWAL Projects
Package Name	:	Fire Fighting System
Revision	:	-
No. of Copies	:	-
Vendor	:	-

Material's	All materials supplied under this approval must be brand new and not refurbished or repaired. (Comply)
Warranty / Guarantee	The warranty period for materials will be(2/5/7) years against all defects in workmanship and material bearing labor, maintenance, repair, and replacement cost for all activities. The warranty/guarantee will be applied as per TAWAL standard related procedures starting from certification date of site accceptnace. (COMPLY 2 YEARS)
End of Life (EOL) End of Support (EOS)	Supplier must inform TAWAL minimum prior 6 months of EOL (End of life), and 1-year prior of EOS (End of service) (Comply)
Spare Parts	The Supplier is requested to insure that all the material which will be supplied to Tawal in any project must have a minimum 3% buffer material available in its warehouse to cover any damage material and cover spare parts during and after warranty period until EOS. (Comply) The Supplier must be obliger to sell and provide all the spare parts to either Tawal or any contractor or vendor assigned by Tawal. (Comply)
Right to Substitute Enhanced Product	During the term of the Approval, products, equipment and software ..etc. supplier shall conduct continuous modifications, upgrades , update and enhancements with complete technical support. Moreover, Supplier shall inform TAWAL about this enhancement on that products, which exceed that approval limits, Supplier shall also provide TAWAL any updates or upgrades which related to the products whether positive or negative requirement. Supplier shall commit to provide any updates required whether products, equipment and software etc.. without additional costs to TAWAL (Comply)
Confidentiality	Supplier shall comply with Confidential Information includes, but is not limited to proprietary or confidential commercial, financial, marketing, business and technical or other data, including know-how, trade secrets, specifications, algorithms, calculations, formulae, processes, procedures, business methods, diagrams, drawings and all other confidential information of whatever nature relating to the Disclosing Party or its businesses (whether written or oral, in any form or medium) given to the Recipient in the course of exploring the purpose of the Agreement signed with TAWAL. (Comply)

This Form shall be governed by the Agreement that is, or will be, signed between TAWAL and the Supplier. If there is any conflict or discrepancy between the Agreement and this Form, the Agreement shall supersede and prevail to the extent of such conflict or discrepancy.

Signature :

TAWAL - Telecommunications Towers Company Ltd			Contractors Services Co.		
Name	:	Kareem R. Elmallah	Name	:	Engr. Bahaa Zuhair
Date	:	10-10-23	Date	:	26-07-2023
Signature	:		Signature	:	
Job Titel	:	Design Manger	Job Titel	:	Safety & Security Senior Engineer

Main Contractor المقاول الرئيسي	Consultant الإستشاري	Owner المالك
شركة راية التجديد للمقاولات .Renewals Banner For Contracting Co	مكتب مـــاز للإستشارات الهندسية Maz Engineering Consulting Office	الأوقـــاف الصحية Health Endowments

المشروع : انشاء مركز الفوزان للنساء والأطفال بمستشفى الزلفي العام
Project: Establishing the Al-Fawzan Center for Women and Children at Al-Zulfi General Hospital

Pre-Qualification Submittal : تقديم التأهيل المسبق

MAR-ZULFI-MEC-019	Request No رقم الطلب	Pre-qualification & Tech. Submittal for FIRE SUPPRESSION SYSTEMS from CONTRACTORS SERVICES COMPANY	وصف المواد Material Descrption
	Item No رقم البند		
10/8/2025	تاريخ التقـــديم :Submission date	تقديم جديد New submission	■
	تاريخ الإستلام :Receipt date	إعادة تقديم Resubmission	☐

OTHERS أخرى	☐	SPACE مساحة	☐	ELECTRICAL كهرباء	☐	MECHANICAL ميكانيكا	■	ARCHITECTURAL معماري	☐	STRUCTURAL إنشائي	☐

- على المقاول إرفاق صورة من العينة او الكتالوج او احضار العينة للموقع.
.The contractor must attach a copy of the sample or catalog or bring the sample to the site
- يتعهد المقاول بأن المواد المقدمة للاعتماد مطابقة للمواصفات
.The contractor undertakes that the materials submitted for approval conform to the specifications

Contractor المقاول

Project Manger مدير المشروع		Implementation engineer مهندس التنفيذ	
Eng Youssef Ismail	: Name الأسـم		: Name الأسـم
	: signature التوقيع		: signature التوقيع

Receipt notes ملاحظات الإستلام

لا مانع من الاعتماد مع مراعاة ما يلي:
1- الالتزام التام بالمواصفات الفنية المعتمدة وأصول الصناعة والتركيب.
2- تقديم شركات أخرى للاعتماد.
3- الالتزام بكود NFPA واشتراطات الدفاع المدني حيثما ينطبق.
4- تقديم حسابات مفصلة قبل عمل selection للنظام للغرف التي تحتاج clean agent.
5- الالتزام بالمخططات التنفيذية المعتمدة.
6- - تقديم شهادة منشأ (Certificate of Origin) وضمان المصنع لمدة لا تقل عن سنتين.

Consultant الإستشاري

Project Manger مدير المشروع		Supervision engineer مهندس الإشراف	
Eng Amjad Abdel Mowla	: Name الأسـم		: Name الأسـم
	: signature التوقيع		: signature التوقيع

21/10/2025``

مرفوض REJECTED	D	يعاد التقديم REVISED AND RESUBMIT	C	معتمد بملاحظات APPROVED AS NOTED	B	معتمد APPROVED	A	حالة الأعتماد STATUS CODE:			

	Date of receipt تاريخ الإستلام			Receiving the application after review استلام الطلب بعد المراجعة	
	: signature التوقيع	Not Done لم يتم	☐		Done تم ☐

SAUDI CONSULTING SERVICES Co.
ENGINEERING CONSULTANTS
Engineer Dr. Tarek M. A. Shawaf
CR (1010322156)

شركة الخدمات الاستشارية السعودية
للاستشارات الهندسية
الدكتور المهندس طارق الشواف
رقم السجل (١٠١٠٣٢٢١٥٦)

الرقم : ٢٠٣/ع/٢٠٢٣
التاريخ : ١٤٤٤/٠٨/١٤هـ
الموافق : ٢٠٢٣/٠٣/٠٦م

إستشاري مشاريع
جامعة تبوك

السادة/ الفنار للإنشاءات فرع شركة الفنار **المحترمين**
عناية المهندس / مدير المشروع **المحترم**

الموضوع: **مشروع إستكمال إنشاء كلية العلوم - المرحلة الأولى والمرحلة الثانية (للأعمال المتبقية)**
إعتماد مورد و مقاول الإطفاء بالغاز FM200.

السلام عليكم ورحمة الله وبركاته ،،،

إشارة الى الموضوع أعلاه ، وإلى خطابكم رقم EL60-228 بتاريخ ٢٠٢٣/٠٢/٢٥م ، بخصوص تأهيل مورد ومقاول FM200 لتوريد وتنفيذ نظام الاطفاء بالغاز.

وبناءاً على خطاب سعادة مدير إدارة المشاريع رقم ٤٤/٠٥٢/٤٢٧٥٥ بتاريخ ١٤٤٤/٠٨/٠٩هـ، نفيدكم بالموافقة على إعتماد شركة أعمال المقاولين للتجارة والمقاولات CSC لتوريد نظام اطفاء الغاز شركة AVENGER - بلد المنشأ USA كمورد فقط ، على أن يتم الإلتزام بما يلي :-

١- تقديم الحسابات الخاصة بالنظام والمخططات التنفيذية و مخططات ثلاثية الابعاد لكل غرفة (ISOMETRIC DRAWINGS) والالتزام التام بشروط ومواصفات المشروع وتعليمات الدفاع المدني.

٢- تقديم تسلسل تشغيل Sequence of operation .

٣- تقفيل جميع الفتحات وتركيب دنابر أتوماتيكية لمجاري الهواء في الغرف المحمية بهذا النظام لاستطاعة عمل اختبار INTEGRITY TEST .

٤- التوريد والتركيب طبقا لمواصفات المشروع والكود السعودي والكود NFPA2001 وجداول الكميات والمخططات المعتمدة من هيئة الدفاع المدني.

٥- تركيب انظمة الكشف و التشغيل و الإنذار والتحكم واختبارها وصيانتها وفقا لمعايير NFPA 70 & NFPA 72.

٦- توفير علامات تحذير و ارشادات عند مداخل المناطق المحمية و داخلها. يجب ان يكون لون علامة الامان وفقا لمعيار ANSI Z535.2 .

٧- ربط نظام FM200 مع نظام الانذار بالمبني و نظام BMS .

٨- تقديم شهادات ضمان والمنشأ و الاختبار موثقة من الجهات المعتمدة.

وتقبلوا تحياتي ...

مدير المشروع

المهندس / حسن عطاالله

CLIENT: الرياض الخضراء RIYADH GREEN | CONSULTANT: دورش هولدنغ جي ام بي اتش Dorsch Holding GmbH KSA | CONTRACTOR: ALMAJAL ALARABI

MATERIAL INSPECTION REQUEST - MIR

Project Name	Construction and operate Phase-1 Green Riyadh Nyrsery	**MIR Ref.No**	**MAG-MEC-MIR-00261**
Client	RCRC	**Request submission (Date & Time)**	22/7/2024
Employer		**Inspection (Date & Time)**	22/7/2024
PMC	DORSCH	**Rev No**	
Engineer		**MIR Submitted By**	SHAIK WASEEM
Contractor	Consortium of Al Majal Al Arabi and ADVACON	**MIR Submitted To**	Consultant Dorsch

Part A: By the Contractor

Materials Submittal Approval References: GRP-07-NU002-MAG-MEC-MAT-00091

Description of Supplied Materials: NOVEC System for IT Room At Administration Building.

Manufacturer - Country of Origin: AVENGER

Supplier : CSC- CONTRACTORS SERVICES COMPANY.

Delivery Note Number: RUH-240100245

Date of Receipt of Material On Site: 24/6/2024

Storage Location: Site

Contractor:

Name: SHAIK WASEEM Signature: Date: 22/7/2024

Part B: By the Engineer

Inspection Reports:

Physical Damage?	☐ Yes	■ No
Details Given in Delivery Note Correct? (Type, Size, Wt., Qty. etc.)	■ Yes	☐ No
Conform with Approved Submission? (Certified etc.)	■ Yes	☐ No

Inspector / Material Engineer Remarks:

Name: Signature: Date:

Engineer's Decision:

The above materials have been inspected on site and found, at time of inspection, to be:

☐ A- Approved -Fully satisfactory and can be used for permanent works at site.

■ B- Approved - with CommentsPartialy satisfactory and can be used for permanent works after taking into consideration our comments mentioned in remarks

☐ C - Revise and Resubmit - Correct documents / provide additional information requested

☐ D - Rejected - Can not be used for permanent works at site

All the components should be stored as per the manufacturing recommendations till they are taken-up for installation

Comments:

Name: Abdul Jabbar, Sr. Mech. Engg. Signature: Date: 05.07.2024

CONSULTANT:

MATERIAL SUBMITTAL FORM

Part A: Project & Record Information:			
Project Name	Green Riyadh Programe	Submittal No:	GRP-07-NU002-MAG-MEC-MAT-00091
Client	Royal Commission for Riyadh City	Revision No:	01
Employer		Darwing Ref.	
PMC	Dourch Group DC Abu Dhabi	BOQ Ref: if any	Bill No. 4
Engineer		Approx. Qty	
Contractor	Al Majal AL Arabi Groub JV Advanced Concepts Contracting co	Submission Date	27-MAY-24

Part B: Material Submittal Discipline:			
Related Discipline	☐ Civil Material	☐ Architectural Material	☐ Electrical Material
	☒ Mechanical Material	☐ Others (Specify):	

Part C: Material Details				Attachment Checklist		
Spec's. Ref.				1	Material Approval Form	✓
Specified Material		NOVEC System for IT Room at Administration Budling		2	Compliance statement based on project Specification Contractor to add Design projection, threshold levels as applicable.	
				3	Manufacture & supplier details with contact including country of manufacture.	✓
Proposed Material		NOVEC System for IT Room at Administration Budling		4	Manufacture Technical date sheet.	✓
				5	Previous test Reports.	✓
Manufacturer's	Name	SFK-5-1-12 AGENT-AVENGER		6	Manufacture/ supplier warranty.	✓
	Address	AVENGER		7	Copy of relevant page of Specification attach project Specification, Saudi Standards/Specifications etc.	
Supplier's	Name	CSC-CONTRACTORS SERVICES COMPANY		8	Copy of relevant page of Bill of Quantities Highlight the item.	
	Address	RIYADH		9	Copy of Drawings where applicable with Design parameters, calculations etc.	
Estidama Approval				10	Copies of previous other approvals by external entities for reference only.	✓
Justification of Alternative Material				11	Copy of operating manual & Original Equipment manufacture (OEM) maintenance recommendations.	
				12	Any other relevant information.	

Part C: Contractors Review	M.E	HSE	QA/QC	Project Manager
Name				Ahmed Shobra
Signature				
Date				06-MAY-24

We do certify that the material submitted herewith has been reviewed in details and in accordance with the Contract Documents except as otherwise stated here above.

Part D: Engineers Review / Approval		
Employer/ Engineer Approval	☐ A - Approved	C - Revised and resubmit
	☐ B - Approved with comments	D - Rejected

Note(1): Employer's/ Engineer's approval is for conformance with information given and design concept expressed in Contract Documents. Approval does not authorize changes to Contract Documents. Employer's/ Engineer's approval does not relieve the Contractor from his contractual obligation to ensure conformance to all Contract Documents. Any deviations, to the Contract Documents found subsequent to Employer's/ Engineer's approval are to be corrected by the Contractor at no extra Cost/Time to the Employer.

	Engineer's ME / SE	Engineer's RE	For RCRC
Name			
Signature			
Date			

King Fahd Causeway Authority
Al Khobar Kingdom of Saudi Arabia
Al-Khobar, Ash Sharqīyah 50004
P: 009668967000
F: 009668963111

Project: 001533 Improvement Of Cargo Area Saudi Side

Submittal #373.01 - Shop Drawing and Calculation for Novec System

Revision	01	**Submittal Manager**	Amr Saeed (Dar Al-Riyadh)
Status	Open	**Date Created**	Aug 31, 2025
Issue Date		**Spec Section**	
Responsible Contractor	Shade	**Received From**	
Received Date		**Submit By**	
Final Due Date	Sep 17, 2025	**Lead Time**	
Location		**Type**	Material Submittal
Submittal Package			

Approvers Amer khabbaz (Dar Al-Riyadh), Wajid Khaja Ali (Dar Al-Riyadh), Osman Mohamed (Dar Al-Riyadh), Amr Saeed (Dar Al-Riyadh), Bilal Hassouneh (Dar Al-Riyadh), Khalifa Aldossary (Dar Al-Riyadh), Ahmed Bumtaia (King Fahd Causeway Authority)

Ball in Court Bilal Hassouneh (Dar Al-Riyadh)

Distribution

Description

Note 1

- Approval shall not relieve the Contractor of his liabilities under the Contract or Constitute authorization of any change to the Contract Documents.
- The Contractor certifies that the material submitted herewith has been reviewed in detail and is in compliance with the contract drawings and specifications.
- This check is only for review of general conformance with the design concept of the project and general compliance with the information given in Contract Documents. The Contractor is responsible for confirming and correlating all quantities and dimensions selecting fabrication processes and techniques of the construction; coordinating his work with that of other trades, and performing his work in a safe and satisfactory manner.

Submittal Workflow

Name	Sent Date	Due Date	Returned Date	Response	Attachments
General Information Attachments					SERVER ROOM.pdf update.pdf SERVER ROOM.pdf SERVER ROOM new update (1) (3).dwg NEW IT ROOM.pdf IT ROOM.pdf NOVEC SYSTEM COMMENT COMPLIANCE..pdf 500PSI Avenger 5112 Manual.pdf NEW IT - CABIN- PLAN (1) (1) (4) (3).dwg
Amer khabbaz	Sep 1, 2025	Sep 5, 2025	Sep 1, 2025	Approved as Noted	
Wajid Khaja Ali	Sep 1, 2025	Sep 5, 2025	Sep 2, 2025	Approved as Noted	
Comment	There must be void detectors in server room similar to It room in above ceiling. The locations for IT and server room are to strictly as per coordination layouts approval.				

Name	Sent Date	Due Date	Returned Date	Response	Attachments
	NFPA standards for battery backup of the Novec panel is to be complied.				
Osman Mohamed		Sep 5, 2025	Sep 1, 2025	Approved as Noted	
Comment	- Manual Release To be out of Server Room. - Cylinder Location to Coordinate with other Services and Devices. - IT Cabin Door Location to be As Approved Drawing. - Shift IT Manual Release to Other side of Door.				
Amr Saeed	Sep 1, 2025	Sep 5, 2025	Sep 2, 2025	Approved as Noted	
Comment	mep comments to be addressed				
Bilal Hassouneh	Sep 2, 2025	Sep 9, 2025		Pending	
Khalifa Aldossary		Sep 13, 2025		Pending	
Ahmed Bumtaia		Sep 17, 2025		Pending	

وزارة الصحة
Health

MOH
Execution Contracts and Control Administration
Received 16-7-2023
File No.
Forward to Sami

FM-E-P07-01: Manufacturer, Agent/Distributor & Sub-Contractor Approval
اعتماد الجهة المصنعة، الوكيل / الموزع ومقاول الباطن

Main Contractor : المقاول الرئيسي AL MAJAL AL ARABI	Consultant : KHATIB & ALAMI :الاستشاري
Submittal Title: عنوان التقديم	Location/Use:All Buildings :الموقع / الاستخدام
Project Title : General Hospital Hail-300-Bed عنوان المشروع	Project #: المشروع Submittal # ME-ALL-PERQ-045-REV-00
New Submittal: ☐ تقديم جديد Re-Submittal: ☒ إعادة التقديم Ref. #: الرقم المرجعي	Date: 12/07/2023
Manufacturer ☒ الجهة المصنعة Agent / Distributor ☒ الوكيل / الموزع Sub-Contractor ☐ مقاول الباطن	

Details of Equipment / Materials /Services to be Supplied — تفاصيل المعدات / المواد / الخدمات التي يتم توريدها

PRALIFICATION FOR CONTRACTORS SERVICES CO FOR TRADING & CONTRACTING COMPANY Fm200 & co2 & foam system fire fighting valves

If Manufacturer, please provide the following information on a separate sheet	إذا كان جهة مصنعة، يرجى تقديم المعلومات التالية في ورقة منفصلة
1. Details of Product Range and Capabilities	١- تفاصيل نطاق المنتج والقدرات.
2. Details of Main Manufacturing Processes and Equipment	٢ - تفاصيل عمليات التصنيع الرئيسية والمعدات.
3. List of Existing Customers in the Healthcare Sector	٣ - قائمة بالعملاء الحاليين في قطاع الرعاية الصحية.
4.Details of Quality Systems Employed	٤ - تفاصيل أنظمة الجودة المستخدمة.
5. Country of Manufacture	٥ - دولة الجهة المصنعة.
If Agent / Distributor, please provide the following information on separate sheet	إذا كان وكيل / موزع، الرجاء إرفاق المعلومات التالية في ورقة منفصلة
1. List of Agencies / Distributorships held	١ - قائمة بالوكالات / اتفاقيات التوزيع التي تم عملها.
2. Details of Items normally held in stock	٢ - تفاصيل البنود التي يتم الاحتفاظ بها عادة في المخزون.
3. Income and balance sheet for the last three years	٣ - قائمة الدخل والميزانية العمومية لآخر ثلاث سنوات.
4. Agency certificate stamped from KSA embassy in country of origin and certified from chamber of commerce.	٤ - شهادة الوكالة مختومة من سفارة المملكة العربية السعودية في دولة الأصل ومعتمدة من الغرفة التجارية.
If Sub-Contractor, please provide the following information on a separate sheet	إذا كان مقاول الباطن، الرجاء إرفاق المعلومات التالية في ورقة منفصلة
1. Registration Certificates for proposed Service	١ - شهادات التسجيل للخدمة المقترحة.
2. Annual turnover & last 3 years certified accounts	٢ - الدوران السنوي والحسابات المعتمدة لآخر ثلاث سنوات.
3. Healthcare Experience	٣ - الخبرات في مجال الرعاية الصحية
4. Current Capacity	٤ - القدرة الحالية.

Contractor Comments
ملاحظات المقاول

Contractor Stamp
شركة المجال العربي للمقاولات
Al Majal Al Arabi Construction Co.
CR: 1010161...

PM Name: Ahmed Sami اسم مدير المشروع	Signature: التوقيع	Date: التاريخ

Consultant's Review
مراجعة الاستشاري

Consultant Comments
ملاحظات الاستشاري

كود # B # للملف التأهيلي لشركة أعمال المقاولية للتجارة والمقاولات تحتاج تقديم ما يثبت وجود ميزانية إضافية لديها بالغاية ... حسب التقرير المرفق ... لكل نظام ... الكود المراجعة لاعتماده مع الجهة

Consultant Stamp
ختم الاستشاري

PM Name:	Signature: التوقيع	Date: التاريخ	
A): Approved ☐ معتمد	B): Approved with comments ☒ معتمد مع ملاحظات	C): Resubmit ☐ إعادة التقديم	D): Rejected ☐ مرفوض

MOH Review مراجعة وزارة الصحة

Control Observation & Submittal Review Check sheet complete	☐ نموذج تدقيق مراجعة التقديمات وملاحظات التحكم مرفق
Engineering Observation & Submittal Review Check sheet complete	☑ نموذج تدقيق مراجعة التقديمات وملاحظات الدعم الهندسي مرفق
PM Observation & Submittal Review Check sheet complete	☐ نموذج تدقيق مراجعة التقديمات وملاحظات مدير المشروع مرفق

PM Name: وليد الحكمي	Signature: التوقيع	Date: التاريخ 2023/11/15

Supervision Manager Comments: ملاحظات مدير الإشراف

للاسباب من الاعتماد مع مراعاة ملاحظات الدعم الهندسي المرفقة

A): Approved ☐ معتمد	B): Approved with comments ☒ معتمد مع ملاحظات	C): Resubmit ☐ إعادة التقديم	D): Rejected ☐ مرفوض
SM Name: مدير الإشراف فواز سعيد آل عائض	Signature: التوقيع	Date: التاريخ ١٤٤٥/١١/١٥	

General Managers Review- Sub-Contractors only — مراجعة المدير العام - مقاولي الباطن فقط

General Manager Comments: ملاحظات المدير العام

A): Approved ☐ معتمد	B): Approved with comments ☐ معتمد مع ملاحظات	C): Resubmit ☐ إعادة التقديم	D): Rejected ☐ مرفوض
GM Name: المدير العام محمد بن عبد الحميد الديحان	Signature: التوقيع	Date: التاريخ	

MOH Projects Internal Observation Report

roject No.: رقم المشروع:	405110100	Project Title: إسم المشروع:	مستشفى حائل 300 سرير
Date: التاريخ:	2023 / 8 / 2	Sent to: المرسل إليه:	مدير أدارة الاشراف على المشاريع
Subject: الموضوع:	أعتماد مقاول باطن لتنفيذ أعمال نظام الاطفاء بالغاز النظيف وثانى اكسيد الكربون والفوم FM200 , CO2, Foam	Observation No.: رقم تقرير الملاحظات:	
Consultant: الإستشاري:	خطيب وعلمى	Main Contractor: المقاول الرئيسي:	مجموعة المجال العربى للمقاولات
Prepared by: تم الإعداد بواسطة:	صبرى شرف	Other: أخري:	

Observations and Comments — **الملاحظات**

اللغة العربية

1- نوصى بأعتماد الملف الفني لشركة أعمال المقاوين للتجارة والمقاولات (CSC) كمقاول باطن لاعمال توريد وتركيب وأختبار وتشغيل لانظمة أطفاء الحريق بالغاز النظيف (FM200) وبغاز ثانى أكسيد الكربون (CO2) وبنظام الفوم (Foam) وذلك حسب اعتماد وملاحظات وتوصيات الاستشارى .

2- يتم تقديم الملف الفنى مشمول بكافة التفاصيل والمكونات والمخططات التصميمية والحسابات المعتمدة من الاستشارى لجميع الغرف بالمشروع حسب متطلبات الدفاع المدنى.

3- تقديم عينات من المواد المستخدمة .

4- الالتزام بالمواصفات الفنية وأشتراطات العقد , والقياسية (NFPA) ومتطلبات الدفاع المدنى .

5- الالتزام بالجدول الزمنى للمشروع .

Completed By [print name]: راجعه (الاسم طباعة) م / صبرى شرف	Signature:التوقيع	Date : التاريخ 2 /8/2023
Approved By [print name]: اعتمده (الاسم طباعة) م / سامى المنيف	Signature: التوقيع	Date : التاريخ ١٤٤٥ / ١ / ١٥

DISTRIBUTION

- [ ] General Manager
- [x] Supervision Dept. Manager
- [ ] Regional Manager
- [ ] Construction Manager
- [ ] Engineering Support Team Manager
- [ ] Control Team Manager
- [ ] QA/QC Manager
- [ ] Other

PMO-FM-RP-05(02)

وزارة الصحة
Ministry of Health

ARTAR TECHNOLOGY

CONTRACTOR / المقاول

REQUEST FOR MATERIAL & EQUIPMENT APPROVAL

Project Site / موقع المشروع: Replacement and Development of the Electric Infrastructure Network at The MAGARDA General Hospital
إحلال و تأمين مصادر التغذية الإحتياطية الكهربائية لمستشفى المجاردة العام

Request No. / رقم الطلب: MGH_EE_MRA_010_Rev01
Date / التاريخ: 5 SEP - 2024

Discipline:

- ☐ Civil / مدني
- ☐ Architectural / معماري
- ☐ Structural / انشائي
- ☐ Mechanical / ميكانيكي
- ☐ Electrical / كهربائي
- ☐ Others / اخرى: _____

Attached References / المرفقات

- ☐ Catalogues / دليل المستخدم
- ☐ Drawings / المخططات
- ☐ Certifications / الشهادات
- ☐ Samples / العينات
- ☐ Test / اختبار
- ☐ Calculations/ الحسابات
- ☐ Specifications / المواصفات
- ☐ Others / اخرى: _____

Item # رقم البند	Description الوصف	Quantity الكمية	Manufacturer/ Supplier المورد / المصنع	Country of Origin بلد المنشأ	Specs. Ref. مرجع المواصفات	BOQ Ref. مرجع جدول الكميات	Action Code رمز الحالة
1	GENERATOR ROOM FM200 SYSTEM	1	CSC/AVENGER	KSA	SECTION 21 00 00	BOQ(1)	B

Action Code/رمز الحالة	A = Approved / موافقة	B = Approved as noted موافقة مع شروط	C= Resubmit اعادة تقديم حسب الملاحظات	D = Rejected مرفوض

Contractor Signature & Stamp / توقيع المقاول و الختم

Name / الاسم: ALRASHID

Signature / التوقيع:

Date: / التاريخ: 5 sep - 2024

We certify that above submitted items are correct and in strict compliance to the project drawings, specification, and contract except otherwise stated

نصادق على صحة البنود المسلمة أعلاه و كذلك على الالتزام التام بمخططات المشروع، والمواصفات و العقد باستثناء ما ينص على خلاف ذلك

شركة عبدالرحمن سعد الراشد وأولاده القابضة
مساهمة مقفلة
مشاريع الكهرباء والطاقة
Power & Projects
Abdul Rahman Saad Al Rashid and Sons Holding Co.

MOH Technical Team Comments and Remarks / تعليق و ملاحظات الفريق الفني بالوزارة

Approval Section / القبول

MOH Technical Team الفريق الفني بالوزارة	MOH Head Technical Support Unit رئيس وحدة الدعم الفني	Assistant General Director مساعد المدير العام للشؤون الهندسية والدعم الفني
Reviewed by / راجعها:	Noted by / لاحظها:	Approved by / اعتمدها:
Name / الاسم:	Name / الاسم:	Name / الاسم:
Signature / التوقيع:	Signature / التوقيع:	Signature / التوقيع:
Date / التاريخ: ٢٠٢٤/٩/١٨	Date / التاريخ:	Date / التاريخ:

وزارة الصحة
Ministry of Health

رقم القدم010 رقم المراجعة 01 تاريخ القدم 2024/09/05

Code (B)

مشروع: إحلال تأمين مصادر الاحتياطية الكهربائية لمستشفى المجاردة العام

الموافقة على نظام الإطفاء النظيف **FM200**

علي المقاول:

1- بعد الانتهاء من التركيب والاختبارات تقديم ما يفيد بإعتماد وموافقة الدفاع المدني بإكتمال الاعمال حسب الشروط والمواصفات الخاصة بالدفاع المدني.
2- الأسطوانات واللوحات وجميع الاكسسوارات يجب ان تتوافق مع اختبارات UL ومعتمدة من FM ومناسبة للغاز النظيف السائل.
3- الأسطوانات يجب ان تكون ذات تفريغ سريع وفعال في 10 ثواني او اقل، وتكون مناسبة لإعادة التعبئة.
4- يجب تركيب اللوحة في موقع جيد التهوية وبعيد عن الحرارة والاتربة والاهتزازات.
5- مفتاح التشغيل اليدوي يجب ان يكون في موقع يسهل الوصول إلية ومحمي بصندوق زجاجي قابل للكسر.
6- تحديد مدة التأخير بين تنشيط المفتاح وبدأ الانطلاق حتى يتمكن الموجودين من إخلاء المكان قبل إنطلاق الغاز.
7- تركيب Motorize damper على جميع منافذ اللوفرات وفتحات التكييف ومراوح السحب.
8- تركيب رداد على الأبواب.
9- ربط مراوح السحب مع إنذار الحريق على ان تتوقف عند حدوث حريق.

MAIN CONTRACTOR	CLEINT	MEP CONTRACTOR
MAC DESIGN • BUILD • DELIVER	وزارة الثقافة Ministry of Culture	TECHNO تكنو

MATERIAL INPECTION REQUEST

Project No.: 586		Date :	03-Nov-21
Submittal No.:	MOC-MIR-MECH-022	Specs Ref. No.:	
Contract Drawing Ref. No. :		B.O.Q Ref. No.:	

DISCIPLINE

☐ Arch. ☐ Civil ☐ Elec. ☒ Mech/HVAC ☐ L.S. ☐ H.S. ☐ Others

Material Description: FM200 Fire Suppression System

Date of Arrival: 03/11/2021
Material Submittal Reference No: Mech-034-REV-01
Manufacturer/Supplier's Details (CSC) Contractors Services CO.
Country of Origin: KSA
Serial No :
Quantity/Unit: As Attached

Attachments: ☒ Delivery notes ☒ Site Photo
☐ Ware House Receipt ☐ Certificate of Compliance ☐ Packing List ☐ Invoice / Bill ☐

SUBMITTED BY:	RECEIVED BY:
MEP Contractor:	Main Contractor:
Name: Eng. Ahmad Issa	Name: Tamer Ababneh
Signature:	Signature:
Date: 03-Nov-21	Date:

TECHNO JMAS 0010310

Consultant's Approval

Code:	A	B	C	D	E
	Approved	Approved as noted ✓	Revise and Resubmit	Rejected	Review Not Required

Comments:

+ ~~[illegible]~~ final approval subject to test & Commissioning
+ all material to be UL/FM certificate

Inspection Report	YES	NO	Signature
Physical Damage ?			
Confirm with the approved submittal			
Accessories/Parts included ?			

Client / CONSULTANT'S FINAL APPROVAL

Inspected/Reviewed by:	Approved by:
Name: Imad	Name:
Date: 7/11/021	Date: AM
Sign:	Sign:

Acknowledgement of receipt (kindly acknowledge receipt and return this sheet to the sender)
Recipient's Name: Job title: Signature: Date:

MOC-MIR-MEP-0022

3:18
03/11/21

MAIN CONTRACTOR	CLIENT	MEP CONTRACTOR

MATERIAL SUBMITTAL FORM
MECHANICAL

Project No.: MINISTRY OF CULTURE JAX A — Date: 19-Sep-21

Submittal No.: MOC-MS-MECH-034 REV-001 — Specs Ref. No.:

Contract Drawing Ref. No.: - - — B.O.Q Ref. No.: -

DISCIPLINE

☐ Arch. ☐ Civil ☐ Elec. ☒ Mech/Fi ☐ L.S. ☐ H.S. ☐ Others

Attachments

☒ Technical Brochure ☒ Manufacturer's Specs ☐ Sample ☐ Oper. Manual ☐ Others

Material Description:1 FM200 Fire Suppriss on System

SUBMITTED BY:	REVIEWED BY:
MEP Contractor: Technical Electromechanical Works Co. Ltd (Techno)	**Mian Contractor:** Mahmoud A Chaaban & Partner Co. (MAC)
Name: Eng. Ahmad Issa	Name:
Signature:	Signature:
Date: 19-Sep-21	Date:

TECHNO JAX A CO10310

Name of Manufacturer/Supplier: (CSC) Contractors Services CO.

Postal Address: P.O Box.No: 41266 Postal Code 11521 Riyadh

Tel #: 966 11 4713176 — Fax #: 966 11 2420140

Web site: www.csc.com.sa — E-mail Address: info@csc.com.sa

Client's Approval

Code:	A	B ✓	C	D	E
	Approved	Approved as noted	Revise and Resubmit	Rejected	Review Not Required

Comments:

- Gas Cylinder Foundation to be Construct.
- integrety test to be Perform
- test and Commission for system to be as per NFPA standard
- all part/ Components must be certifim

Client's Final Approval

Inspected/Reviewed by:	Approved by:
Name: Imad	Name: AM
Date: 4/10/2021	Date:
Sign:	Sign:

Acknowledgement of receipt (kindly acknowledge receipt and return this sheet to the sender)

Recipient's Name: Job title: Signature: Date:

10:20 AM
05-10-21

المملكة العربية السعودية
وزارة الصحة
المديرية العامة للشؤون الصحية بمنطقة الجوف
إدارة الشئون الهندسية مكتب المدير العام

وزارة الصحة
Ministry of Health

الموضوع / اعتماد نظام إطفاء كيميائي FM200 بمشروع مختبر فحص عينات كورونا بالمختبر الإقليمي بسكاكا الجوف

السادة / شركة الأشغال الميسرة المحترمين

(سكاكا – email : h.mansour@ashamco.net)

السلام عليكم ورحمة الله وبركاته

إشارة إلى خطابكم رقم (٧٣٤-٤٣-٦١٩) بتاريخ ١٤٤٣/٠٨/٠٤ هـ بخصوص طلب اعتماد نوعية نظام الإطفاء الكيميائي FM 200 بمشروع مختبر فحص عينات كورونا بالمختبر الإقليمي بالجوف نفيدكم باعتماد النوعية التالية :-

وصف البند	النوعية	بلد المنشأ	القرار	ملاحظات
نظام إطفاء كيميائي FM200	AVENGER	أمريكي	الموافقة بملاحظات	اختيار أول

مع مراعاة الملاحظات الآتية :-

١- يتم تقديم الحسابات التصميمية والمخططات التفصيلية قبل التوريد وذلك بواسطة مكتب هندسي متخصص بالأمن والسلامة ومعتمد بالدفاع المدني.

على أن يتم التوريد والتركيب حسب المواصفات الفنية والمخططات المعتمدة وتعليمات المهندس المشرف حسب الكتالوجات المرفقة وتوصيات الشركة الصانعة.

ولكم تحياتنا،

مدير إدارة الشئون الهندسية بصحة الجوف

مهندس / مازن بن محمود كبوس

المشفوعات:

creet

MATERIAL REQUEST FORM - MR

			PROJ CODE	SERIAL NO.	
DATE.	13-Aug-22	MR NO.	151	MR-0172	2022
PROJECT/CC NO.	151-NUPCO Dammam Warehouse	WBS ELEMENT.	4112-18 FM 200		
BRAND/SUBMITTAL APPROVED		DATE REQUIRED (ON SITE)			

S.No	ITEM DESCRIPTION	UNIT	QUANTITY	DETAILED SPECIFICATION	REFERENCE BOQ
	SPECIALIST SERVICES FOR FM-200 SYSTEM (DESIGN, SUPPLY, INSTALLATION, TESTING, COMMISSIONING & HANDING OVER)			☐ MS ☐ SD ☐ Sample ☐ Quotation	
	Note: As per attached Take Off & Approved Brand is AVENGER from CSC, approval no. CRT-NPC-DMM-MAR-MEP-00029.			☐ MS ☐ SD ☑ Sample ☐ Quotation	
				☐ MS ☐ SD ☐ Sample ☐ Quotation	
				☐ MS ☐ SD ☐ Sample ☐ Quotation	

General Notes

PREPARED BY: SHERWIN	VERIFIED BY: (Site Incharge/Construction Manager)	APPROVED BY: PROJECT MANAGER	APPROVED BY: PROJECT DIRECTOR
	13-Aug-2022		

Material - MR Attachments	Subcontractor - MR Attachments
1. Material Submittals (Approved) 2. Calculation sheet (signed by PM) 2. Approved Shop Drawing (if required) 3. Approved pre-qualification (if any) 4. Approved Sample	1. Approved quotation signed by PM / PD 2. Government Documents - Company CR - VAT Registration - IBAN Bank (Stamped from Bank) 3-signed contract 4- Calculation sheet (signed by PM)

Approved

Cost Control - Creet International Contracting

Aug 14, 2022, 1:54 PM GMT+3:00

NUPCO DAMMAM WAREHOUSE
Materials Take-off
FM-200 System

Creet International Contracting Co . Ltd

No.	Item	Unit	QTY
	FM-200 System		
1	SDB Room, Ground Floor, GF 04	LS	1
2	Electrical Room, Ground Floor, GF 41	LS	1
3	SDB Room, Mezz. Floor, MF 02	LS	1
4	Hazardous Store, Mezz. Floor, MF 08	LS	1
5	Hazardous Store, Mezz. Floor, MF 09	LS	1
6	Hazardous Store, Mezz. Floor, MF 10	LS	1
7	Hazardous Store, Mezz. Floor, MF 11	LS	1
8	Hazardous Store, Mezz. Floor, MF 12	LS	1
9	Electrical Room, Mezz. Floor, MF 20	LS	1
10	Electrical Room, First Floor Location: between GRIDS (1- 2) & GRIDS (C' - C1)	LS	1
11	Hazardous Store, First Floor, FF 13	LS	1
12	Hazardous Store, First Floor, FF 14	LS	1
13	Hazardous Store, First Floor, FF 15	LS	1
14	Hazardous Store, First Floor, FF 16	LS	1
15	Hazardous Store, First Floor, FF 17	LS	1
16	Hazardous Store, First Floor, FF 18	LS	1
17	Hazardous Store, First Floor, FF 19	LS	1
18	Hazardous Store, First Floor, FF 20	LS	1
19	IT Room, First Floor, FF 47	LS	1
20	UPS Room, First Floor, FF 48	LS	1
21	Electrical Room, Roof Floor, RF 01	LS	1
22	Electrical Room, Roof Floor, RF 03	LS	1

NOTES

1 Approved Brand is **AVENGER** from CSC, approval no. CRT-NPC-DMM-MAR-MEP-00029 "Attached".

Document Title:	MATERIAL SUBMITTAL FORM		
Project Name:	NUPCO-Al Dammam Logistic Centre		
Project Number:		Project Consultant:	JASARA
Project Contractor:	Creet	Document Ref. Number:	CRT-NPC-DMM-DCM-TRA-00572

SUBJECT	Material Submittal for FM-200 (AVENGER)- (CSC)			
Specs. Code & Ref.	B.O.Q. Code Ref.	Drawing No.	Submittal No.	
			CRT-NPC-DMM-MAR-MEP-00029 REV 02	
			Date :	
			1-August-22	
			Date Returned:	

Sub-contractor					
Name:	CSC		Address:		
Address:			Phone:		Telex:
Manufacturer			Supplier/Agent	CSC	
Name:			Name:		
Address:			Address:		
Phone:			Phone:		
Fax:		Telex:	Fax:		Telex:

Information submitted and attached:			
Certificates	☐	Operation & Maintenance Manual	☐
Technical Brochure	☐	Spare Parts List	☐
Manufacturer's Data & Specs.	☑	As Built Drawings	☐
Shop Drawings	☐	Warranty	☐
Samples	☐	Others (specify)	☐

Contractor's Comments: ✓

Material Submittal for FM-200 (AVENGER)

Supplier :- CSC

Consultant's Comments:

1. Installation and testing method statement to be submitted to JASARA team for review\approval 2. All system component to be approved in detailed design from MODON 3. Contractor to submit detailed shop drawings based on the project requirements 4. Main contractor is fully responsible for all works done on the site, must be compatible with the submitted procurements plan dates 5. All installation for the work must be under the manufacture trained team and supervise by engineers & supervisor this including submitting all necessary for installation & required details &coordination drawings and have to be confirm from the manufacture including submitting mockup before delivery 6. Provide all valid legal and warranty certificate 7. This Approval doesn't relieve the contractor for any obligation under the contract and under MODON regulation and is independent of any future review and submitted approved design 8. mock up for the all items to make sure of the specs & quality

Status:				Discipline		Sign & Date	Resident Engineer	
	Approved	1		☐	Arch	Amr Baraka Mechanical Engineer 03 Aug 2022		
	Approved as noted	2		☐	Civil		Sign :	
	Revise and submit	3		☐	Mech		Date :	
	Rejected	4		☐	Elect			
				☐	HVAC			
				☐	LS			

Consultant:	Project:	Contractor:
TANAGHOM CONSULTING CO.	bfim مصنع بن زقر للمواد العازلة -JF2 bfim - JF2	AOC ARCHITECTURAL OASIS CONTRACTING COMPANY شركة واحة المعمار للمقاولات

MATERIAL SUBMITTAL

Ref. No. : MS-BFIM-AOC-113 REV-00

Date : 14 10 2025

☒ New Submittal
☐ Resubmittal

☐ Architectural ☐ Electrical ☐ Civil ☐ Furniture/Equipment
☐ Structural ☒ Mechanical ☐ Electrical ☐ HVAC

Specs. No.
Drwg. No.

S.N	SUPPLIER / MANUFACTURE	Description / Title	No. of Copy	Remarks
1		FIRE FIGHTING		
2		FM200 - Clean Agent Room	1	
3	MANUFACTURE	**Avenger**	1	
4				
5				
6				
7				
8				
9				
10				
11				
12				

* Description: (Manufacture, Model, Type, Size, Colour, etc.)

☐ Catalogue ☐ Drawing ☐ Sample ☐ Certificate ☐ Calculation ☒ Document

Having checked this submittal, we certify that it confirms to the requirements of the Contract Documents in all respects, except as otherwise indicated herein
( )

Engineer:

Received by:

Date Name & Signature of Consultant

Remarks / Comments:

approved as a brand .

capacity & quantity calculations to be submit for approval

to submit full detailed drawing (shop drawing) for the system

Status
A Approved
B Approved as noted
C Revise & Resubmit, Work shall not proceed
D Rejected - Resubmit
N No Action

Contractor		Consultant-For Approval	Client Representative - For Review
Construction Manager **KHALED ATTIA**	Project Manager **IBRAHIM SAMI**	Faheem Badaw 15/10/2025	
		Date Name & Signature	Date Name & Signature

CONSULTANT	OWNER	CONTRACTOR
التاغم للاستشارات الهندسية Tanaghom Consulting	بندة Panda	شركة إعمار الحديد للمقاولات EHCCO

PROJECT NAME:	Panda 40009	LOCATION:	AL-FANAR MALL KHOBAR

DRAWING SUBMITTAL FORM

■ NEW SUBMITTAL ☐ RE-SUBMITTAL | SUBMITTAL DATE: 25-Jul-2023 | MEC-SH-07

PURPOSE OF SUBMITTAL: ■ FOR APPROVAL ☐ FOR COMMENTS ☐ FOR INFORMATION

DRAWING DISCIPLINE: ☐ ARCHITECTURAL ☐ STRUCTURAL ☐ CIVIL ☐ ELECTRICAL ■ H. V. A. C. ☐ PLUMBING ☐ OTHERS... Specify:

TYPE OF DRAWING: ■ SHOP DRAWING ☐ AS-BUILT DRAWING ☐ VENDOR DRAWING ☐ OTHERS

DRAWINGS — NOTE: PLEASE USE THE ATTACHMENT IN CASE ITEMS ARE MORE THAN THE PROVIDED SPACE

S. No.	DRAWING NO.	NO. OF COPIES	ITEM DESCRIPTION	REVISION NO.	APPROVAL STATUS
1	ME-102	1	FM-200	-	
2			(DATA AND UPS ROOM)	-	
3				-	
4				-	
5					

SUBMITTED BY:	ABDUL RHAMAN		DC	25-Jul-2023
	NAME	SIGNATURE	DESIGNATION	DATE SUBMITTED

CONTRACTOR REMARKS: *We clarify that the above submittal is strictly adhered with contractor drawing & specifications except otherwise as stated below.*

CONSULTANTS RECOMMENDATION: *Approval of the above does not relieve the contractor from his contractual obligations.*

* The calculation reviewed based on concentration 7%.
* There no safty factor used with this calculation.
* Room hight not more than 3m.
* The installation shall be as per manufacture specification.
* All system components shall be UL/FM listed or approval agency.

CONTRACTOR		CONSULTANT		OWNER'S REPRESENTATIVE (FOR INFORMATION)	
NAME:	Eng. SAAD MAZEN ALGHUZAWI	NAME:	Eng. ABDEL WAHAB ALI	NAME:	Eng. SALEH A BAHARITH
POSITION:	PROJECT MANAGER	POSITION:	PROJECT MANAGER	POSITION:	PROJECT MANAGER
SIGNATURE:		SIGNATURE:			
DATE:	25-Jul-23	DATE:	July 26, 2023		

APPROVAL STATUS: A APPROVED ☐ | B APPROVED AS NOTED ✓ | C REVISE AND RESUBMIT | D DISAPPROVED

RECEIVED BY: (CONSULTANT)	SIGNATURE: July 26, 2023 DATE:	RECEIVED BY: (CONTRACTOR)	SIGNATURE: DATE:

PURCHASE ORDER
RIYADH METRO PROJECT
CONFIRMING PURCHASE ORDER - DO NOT DUPLICATE

Civil Works Joint Venture

BUYER: Riyadh Metro Project Civil Works Joint Venture Comprising: • Saudi Arabian Bechtel Company • Almabani General Contractors • Consolidated Contractors Company WLL **VAT No: 300951375300003** BACS Headquarters Building Building Number 7703, Secondary Number 2117 Othman Ibn Afaan Branch Road, Al Ezdihar District, Riyadh 12487, Kingdom of Saudi Arabia. Tel: 966 11 5105600 / Fax: 966 11 5105601	**ORDER NUMBER.**	M-BCW-1SPARE-G000-FOR0-00002 Rev. 0
	AWARD DATE:	November 08, 2025
	REQUISITION NO.	M-BCW-1SPARE-G000-FMR-00002 Rev. 0
	MATERIAL DESCRIPTION:	OPM-L1-and-L2 Foam Water Spares

SELLER: Contractors Services Company (CSC) P.O. Box 41208, Riyadh 11521 Riyadh, 11521 Saudi Arabia Attention: Yahya Zuhir Telephone No: 059 420 5600 Fax No: E-mail: yahya@csc.com.sa VAT No:	**Ship and Consign To:** **Attention:** Mohammad (RMP) Mubarak **Ref. No.:** M-BCW-1SPARE-G000-FOR0-00002 **Contact Authorized Procurement prior to Shipment**	**Promise Ship Date:** December 27, 2025 **Shipper:** Contractors Services Company (CSC) **Origin:** Saudi Arabia
Notes: All prices shown herein are firm unless stated otherwise. Subject to the attached General Conditions **Attachments:** General Conditions **Delivery Package:** COMPLETIONS Engineering Inspection required? ☐ No ☒ Yes Material Test Certificate required? ☒ No ☐ Yes	**Bill To:** Civil Works Joint Venture Comprising: • Saudi Arabian Bechtel Company • Almabani General Contractors • Consolidated Contractors Company WLL Attention: Accounting Department P.O Number: M-BCW-1SPARE-G000-FOR0-00002 0 **Invoice Instructions:** 1. SEND Original Invoice and Original Bill of Lading 2. PO Number must appear on all Invoices, Correspondence, Shipping Papers, and Packing Lists.	**Payment Terms:** 100% Cash In Advance **(VAT to be applied)** **Delivery Terms:** DDP, CWJV Warehouse. **Ship Via:** Truck **Buyers Contact for receipt of Materials** **Name :** Yousry Abdel Moneem **Phone:** +966 58 206 9532 **Email::** yrabdelm@bacsrmp.com **Fax::** 966114057828
FOR CWJV USE ONLY: Job Number: 25872.100 Cost Code: 7600511 Duns Number: zEBS1000003264 Commitment Register No.: PO Sequence Number: 312633.12065	**Total Value in SAR**	**775.00**

Name: Faizal Kandy **Title: Procurement Supervisor** **Signature:** Faizal Kandy, **Finance & Commercial Director** **Name:** Pierrot El Hel **Title:** **Signature:** 10.11.2025	Sellers Acceptance **Name:** _____ **Title:** _____ **Signature:** _____ **Date:** _____

المهندسون الاستشاريون ايه ايه دبليو وشركاه AAW وشركاه	وزارة الصحة Ministry of Health المملكة العربية السعودية وزارة الصحة الادارة الهندسية	ARTAR TECHNOLOGY

اسم المشروع:	احلال وتأمين مصادر التغذية الاحتياطية الكهربائية لمستشفى الملك خالد بنجران	رقم:	1302300000001008	الموقع	تعبئة

MATERIALS SUBMITTAL (MS) طلب اعتماد المواد

رقم التقديم الحالي	1	REV NO	00	الرقم المرجعي/	Power-KKNH-ARTAR-ME-01-R00	تقديم جديد	☐
تاريخ التقديم الحالي:	04/02/2025	الموافق:	01/08/1446			إعادة تقديم	☐

سبب التقديم	للإعتماد ☐		للملاحظات ☐		للعلم ☐				Submittal reason
التخصص	ميكانيكا ☐	كهرباء ☐	معماري ☐	تكييف ☐	إنشائي ☐	أخرى ☐	عينات ☐		Major
المرفقات	حسب فني ☐	مواصفات ☐	حسابات ☐	مخططات ☐	تقارير الفحص ☐	جدول التصميم ☐			Attachment

كود اعتماد البند Action Code	منتج في القائمة Item Mandatory list	مرجع جدول الكميات BOQ Ref.	مرجع المواصفات Specs. Ref.	بلد المنشأ Country of Origin	المصنع / المورد Manufacturer/ Supplier	الوصف Description	رقم البند Item No
						FM200 Calculation & Shop Drawing Details For TR Rooms -	1
		M5				KKNHEE-DRW-010-REV00	2
		M6				KKNHEE-DRW-011-REV00	3
		M7				KKNHEE-DRW-012-REV00	4
		M8				KKNHEE-DRW-013-REV00	5
		M3				KKNHEE-DRW-014-REV00	6

Contractor / المقاول

الاسم: / Name: التوقيع: / Signature: التاريخ: / Date:	شركة شيخ الرجل [illegible] مساهمة [illegible] مشاريع الكهرباء والطاقة Power & Projects Abdul Rahman [illegible]	Contractor Signature & Stamp توقيع وختم المقاول

We certify that above submitted items are correct and in strict compliance to the project drawings, specifications, and contract except otherwise stated

نصادق على صحة البنود المسلمة اعلاه وكذلك على الالتزام التام بمخططات المشروع والمواصفات والعقد باستثناء ما ينص على خلاف ذلك

Consultant / الاستشاري ممثل الجهة المالكة

Please Refer To The Attached Comments

المهندسون الاستشاريون AAW & PARTNERS ايه ايه دبليو وشركاه الاشراف على تنفيذ مشاريع وتأمين مصادر التغذية الاحتياطية الكهربائية	مدير المشروع Project Manager	الاسم التوقيع التاريخ	المهندس المختص Tech. Engineer

تعليق وملاحظات الفريق الفني بالوزارة / MOH Technical Team Comments and Remarks

مدير ادارة الدعم الهندسي / Director of Engineering Support Department		مدير المشروع بالوزارة / MOH Project Manager	
الاسم / Name:		الاسم / Name:	
التوقيع / Signature:		التوقيع / Signature:	
التاريخ / Date:		التاريخ / Date:	

تنويه: إن ملاحظات الجهة المالكة وممثليها لا تعفي المقاول من مسؤولياته العقدية والتعاقدية علما بأن العقد المبرم مع الجهة المالكة

المملكة العربية السعودية
ترخيص رقم ٣٢٣ / ١٣ / ١٢٩
سجل تجاري رقم ١٠١٠٣٢٢٤٤٨
المقر الرئيسي - الرياض
الرقم الضريبي ٣٠٠٠٤٧٢٩٤٨٠٠٠٣

AAW & PARTNERS

المهندسون الإستشاريون
إيه إيه دبليو وشركاه

اسم المشروع : احلال وتأمين مصادر التغذية الاحتياطية الكهربائية لمستشفى الملك خالد بنجران

الموقع : نجران

رقم التقديم : MOH-AAW-KKNH-ME-DRW-04-REV.01

تاريخ التقديم : ٢٠٢٥/٢/٤

الموضوع : Shop drawing and calculation clean agent (fm200) for TR rooms

الاعتماد : B

General comments

1. Fire fitting system (FM200) shall be UL listed
2. Calculation shall be matching as per site survey
3. Ventilation system shall be shut down upon activation at the fire suppression system (interface)
4. Discharge time shall be not exceed 10 seconds

AAW & PARTNERS
المهندسون الإستشاريون
إيه إيه دبليو وشركاه
الإشراف على تنفيذ مشاريع إحلال وتأمين مصادر التغذية الاحتياطية الكهربائية

م. حسين مطني

QHSE Management System Formats
DESIGN
Material Submission Sheet Form

Project & Document Details			
Project ID / Name:	R24-028 - SURJ	Issue Date:	08-Sep-2024
Document Reference:	R24-028-MNE-ZZ-MAS-FL-007	Return By:	11-Sep-2024
Revision:	00		

Material Details		Image
Material Type:	FIRE FIGHTING	
Description:	FIRE SUPPRESSION SYSTEM (NOVEC)	
Location:	PROJECT WIDE	
Code On Design Drawing:	TBC	
Supplier/Manufacturer:	AVENGER	
Color/Finish:	AS PER SPEC SHEET	
Dimensions	TBC	
Additional Information:		

Review Details

	A	APPROVED
	B	APPROVED WITH COMMENTS
	C	REVISE AND RESUBMIT
	D	REJECTED

NAME: *Tomaz Copar*

SIGNATURE: *Tomaz Copar*

DATE: *16/09/2024*

Comments:

Ensure that the fire suppression system is in line with the MEP specifications.
Ensure that the Fire Suppression system is approved by the local civil defence /local Authorities.
All components to be UL and FM approved.
Provide calculation, sizing, drawings and schematics relevant to the project.

QHSE Management System Formats
DESIGN
Material Submission Sheet Form

Project & Document Details			
Project Name:	R24-067 - Kirkland & Ellis	Issue Date:	25-May-2025
Document ID:	R24-067-ZZ-MNE-31-MAS-FL-0005	Return By:	29-May-2025
Revision:	02		

Material Details		Image
Description:	**FM200**	
Location:	**LEVEL - 31; SERVER ROOM**	
Drawing Code:		
Supplier / Manufacturer:	**AVENGER**	
Supplier Code:	**CONTRACTORS SERVICES CO**	

Review Details

- [ ] A APPROVED
- [x] B APPROVED WITH COMMENTS
- [ ] C REVISE AND RESUBMIT
- [ ] D REJECTED

NAME: Christopher C. Escober

SIGNATURE:

DATE: May 28, 2025

Comments:

1. Submit method statement for installation and testing of FM200 system to include the following.
   a. Submit Sequence of Operation for the proposed FM200 system. Describe in detail the complete sequence of operation, including alarm functions, shutdown functions, remote signaling, damper operation, time delay and agent discharge for each zone or system.
   b. Submit a test plan describing procedures to be used to test the system. Include a step by step description of all tests to be performed and the type and location of test apparatus to be employed.
   c. Submit Operation and Maintenance Manuals following the requirements of the specification section 212203, Part 1.4, H-Test Plan.
2. Ensure that the FM200 System shall comply with the electrical requirements and is coordinated with the following.
   a. Power supply to the fire suppression system panel.
   b. Interlock wiring and conduit for shutdown of HVAC system and motorized dampers.
   c. Interface with building fire alarm systems.
   d. FM200 control panel shall be provided with battery backup minimum of 24-hours with 5-mins alarm.
   e. FM200 cabling shall be fire resistant cables CWZ.
   f. include the system in the electrical shop drawing for all system components (wall devices, ceiling devices)
3. All exposed equipment, controls and devices shall be submitted to Architect for final approval.

MATERIAL SUBMITTAL

PROJECT NAME : Dining Riyadh- Kingdom Tower	LOCATION : RIYADH - Kingdom Tower

REF NO :-	RAK-SER-MS-ME-021	REV 00	DATE :	15-Sep-22	☑ SUBMITTAL
					☐ RE-SUBMITTAL

☐ ARCHITECTURAL ☐ ELECTRICAL ☐ CIVIL
☐ STRUCTURAL ☑ MECHANICAL ☐ OTHER PRE QUALIFICATION

PLEASE FIND THE ENCLOSED FOLLOWING DOCUMENTS AND MATERIAL

NO	DETAILS	REV		NOTE:-
1	FIRE SUPPRESSION SYSTEM FM 200 -AVENGER	0		

SPECIFICATION REF:	NO SPECIFICATION	
DRAWING REF:	BH2688-FF-FNB-21-102-00-C	
DELIVERY LEAD TIME:	Within one week	
PRODUCT LOCATION :	Level 2- Server room & Electrical Room	
MATERIAL COMPLIANCE	Yes	No
If No" Reason"		

FIRE SUPPRESSION SYSTEM FM 200 - HFC- 227 (UL/ FM APPROVED) -AVENGER

Approved
Approved with comments
☑ Revise & Resubmit
Rejected

Mary Jane Gombio 10-Oct-22

www.bluehausgroup.com

Review of the document submittals has been conducted for the purpose of verifying conformance with the Contract Document (not limited to Drawings) and Project Specifications. The Engineer s review, including approval or direction by the Employer to the suitability or acceptance of submittals, controls, materials, methods or like, shall not relieve the Contractor from any obligations or responsibility for deviations, errors, omissions, or compliance with the requirement of the Contract; the Contractor is deemed to have determined and verified materials, field measurement and field construction criteria related to the submittal, and has checked and coordinated the information included within all relevant submittals with the requirement of the Works under the Contract.

Notes and Comments:

- No objection with the proposed brand/manufacturer.
- Contractor to provide detailed FM 200 calculation based on manufacturers standard for the actual requirement of sizes of nozzles,clean agent, etc.
- Provide complete sequence of operation.
- Provide warranty certificate for the whole FM 200 system

APPROVED STATUS C ☐ D

COMMENTS;-

PREPARED BY: Ali Khalil	RAKAL	TRANSMITTER SIGNATURE	
PROJECT MANAGER		CONSULTANT REPRESENTATIVE	
Rayan Shamaa			

☐ A - APPROVED ☐ B-APPROVED WITH COMMENTS
☐ C - REVISE & RESUBMIT ☐ D - REJECTED

This Approval does not release the contractor of his contractual obligations

PROJECT MANAGER	SIGNATURE
Engr.	

Inspected By
Date : Name & Signature of Consultant

Remarks / Comments

Material Submittal Checklist

Project Name	Kingdom Social Dinning			Issue Date	15-September-2022
From	Company	RAKAL/ MOTIVE	**To**	Company	**BLUEHAUS**
	Attention	*Ali Khalil*			

Material Submittal Description:

Submittal Number	Doc. Type	Discipline	Comp. Initial	Serial No.	Rev. No.	Level	**Lev. 2**
	RAK-SER-MS- ME-021	**MEP**	**RA/MO**	**021**	**00**	Area	SERVER& ELECTRICAL ROOM

Item	**Description**	**Status (Tick**	**Remarks (if any)**
1	Transmittal Form (Rakal Template)	**OK**	
2	Cover Sheet (Details of Trade contractor, Supplier, etc)	**OK**	
3	Index	**OK**	
4	Copy of previous Consultant comments (if not REV0)	**N/A**	REV0
5	Reply Sheet to Consultant Comment (stamped by supplier)	**N/A**	REV0
6	Material schedule (item description, model, brand, COO, qty, location)	**OK**	
7	Copy of relevant project specification sections (i.e. standard, material, spares, warranty, etc...)	**OK**	
8	Compliance Statement to project Specs (per clause, stamped by supplier)	**OK**	
9	Manufacturer Technical Sheets	**OK**	
10	Manufacturer Selection Schedule – if applicable	**OK**	
11	Valid Type Test Certificate	**OK**	
12	Valid Authority License i.e. ICD, Municipality, etc – as applicable.	**OK**	
13	Draft Warranty Certificate (by supplier)	**NO**	
14	Additional relevant Docs (specify)	**NO**	
15	Supplier / Manufacturer Company Profile – if applicable	**OK**	
16	Sample required? If **YES**, submitted?	**NO**	
17	Specified material or alternative? If alternative why?	**NO**	Specified

Submitted By

Designation	Name	Date: 15-09-2022	
RAKAL Project Manager:	Rayan Shamaa		

Review Comments:	

Reviewed By	Company	BLUEHAUS ENGINEERING		
Main Contractor	Name			
	Signature		Date	

وزارة البيئة والمياه والزراعة
Ministry of Environment Water & Agriculture

الرقم ٢١٠٠٤٩٢٤
التاريخ ١٤٤٦/٠١/١٥
المرفقات ١١ لفه

وزارة البيئة والمياه والزراعة
Ministry of Environment Water & Agriculture
Kingdom of Saudi Arabia المملكة العربية السعودية
[٢٧٤] الإدارة العامة للشؤون الهندسية
إدارة الإشراف على التنفيذ
٨١٦

السادة/ مكتب سجال العربية للإستشارات الهندسية المحترمين

الرياض الرمز البريدي:١٣٣٢٧ رقم المبنى: ٣٣٦٩ رقم الوحدة: ١ الرقم الإضافي: ٨٤٧٨
طريق الملك سلمان بن عبدالعزيز – حي النرجس سجل تجاري :١٠١٠٤٣١٤٥١ جوال: ٠٥٩١٥٠٠٠٧٥

نسخة للسادة/ شركة الأولات للصناعة والإنشاء المحدودة المحترمين

المدينة المنورة الرمز البريدي:٤٢٣١٧ رقم المبنى: ٦٩٨٨ رقم الوحدة: ٩ الرقم الإضافي: ٤٦٨٢
شارع: ثابت بن خنساء – حي الخالدية سجل تجاري :١٠١٠٢٦٧٨٤٨ جوال: ٠٥٥٥١٩٠٧٩٦-٠٥٤٤٤٤٩٩٣٦

السلام عليكم ورحمة الله وبركاته ،،،

إشارة إلى خطابكم الوارد برقم (٢٥٠٠٨٩٧٢) وتاريخ ١٤٤٥/٠١/١٠هـ (مرفق نسخة)، بشأن الإشراف الفني على مشروع إنشاء مركز التميز الوطني بمنطقة مكة المكرمة، تعميد رقم (٥٢٠٠٠٠٠٩٨٤٨) والمتضمن طلب المقاول (شركة الأولات للصناعة والإنشاء المحدودة) إعتماد المواصفات الفنية للمواد الخاصة بنظام إطفاء الحريق (FM200) وصناديق إطفاء الحريق للمشروع.

عليه نُفيدكم بأنه لا مانع من إعتماد المواصفات الفنية للمواد الخاصة بنظام إطفاء الحريق (FM200)، وصناديق إطفاء الحريق للمشروع (مرفق نسخ)، مع الإلتزام بالمواصفات الفنية وجداول الكميات التعاقدية ومتطلبات الدفاع المدني، والإلتزام بالقائمة الإلزامية للمحتوى المحلي،

للإطلاع وسرعة إكمال اللازم.

مع أطيب تحياتي ،،،

نائب مدير عام
الإدارة العامة للشؤون الهندسية

م. تركي بن عبدالعزيز الجديد

م. محمد العتيبي
8002472220
www.mewa.gov.sa
info@mewa.gov.sa
هاتف ٠١١٢٠٣٨٨٨٨ | فاكس ٠١١٢٠٣٨٨٨١
وزارة البيئة والمياه والزراعة | ٧٧٩٦ الطريق الدائري الشرقي الفرعي - حي الملك عبدالله | الرياض ١٢٤٢٤ - ٤٢٨٣
Tel +966 11 2038888 | Fax +966 11 2038811
Ministry of Environment Water & Agriculture | 7796 Eastern Ring Branch Rd - King Abdullah Dist. | Riyadh 12424 - 4283

about:blank

وزارة البيئة والمياه والزراعة
Ministry of Environment, Water & Agriculture

التاريخ : ١٤٤٦/٠١/١٠ ١١:١٢ ص
المرفقات : بدون

٢٥٠٠٨٦٧٢

SIGAL CONSULTING

التاريخ: 03/ 01 / 1446 هـ
الموافق: 09/ 07 / 2024 م
الرقـــم : 212/ و / أ / 2024

مشروع/ الإشراف الفني على انشاء فرع مراكز التميز الوطني بمنطقه مكة المكرمة تعميد رقم(52000009848) بتاريخ 1444/7/22
الاستشاري/ شركة سجال للاستشارات المهنية

الموضوع : طلب اعتماد كتالوجات لعينات الشركة الموردة لأعمال مكافحة الحريق

سعادة / مدير عام الادارة العامة للشؤون الهندسية وفقه الله
(بوزارة البيئة والمياه والزراعة)

نسخة إلى شركة الأولات للصناعة والإنشاء المحدودة المحترمين

السلام عليكم ورحمة الله وبركاته

إشارة الى مشروع انشاء فرع مركز التميز الوطني بمنطقة مكة المكرمة مقاولة شركة الأولات للصناعة والأنشاء المحدودة تعميد رقم (52000008387) بتاريخ 1443/10/28هـ والى خطاب المقاول رقم 374/م/2024 بتاريخ03 /1445/01هـ الموافق 2024/07/09م مع مرفقاته (مرفق صورة) بشأن طلب اعتماد عينات الشركة الموردة لأعمال مكافحة الحريق

بعد الدراسة والمراجعة نرفع كامل المعاملة مع مرفقاتها ونوصي باعتماد كتالوجات العينات للشركة الموردة لأعمال مكافحة الحريق (صناديق الحريق – أسطوانات غاز FM200) علي ان يقدم عينة حية بعد اعتماد الكتالوجات لاعتمادها قبل التوريد.

مع الالتزام بالمواصفات الفنية الواردة في جداول الكميات واشتراطات المحتوي المحلي.

ولسعادتكم وافر التحية والتقدي

مدير المشروع
9/ 2024 م
مهندس/ وليد حسن الشافعي

تم المراجعة

المملكة العربية السعودية - ص ب ٣٣٣٧ رقم الحي ٣٣١٩ الرقم الاضافي ٨٤٧٨ طريق الملك سلمان هاتف ٩٦٦١٢٢٧٣٥٥٠ فاكس ٩٦٦١٢٢٧٣٥٥٠ س ت ١٠١٠٤٣١٤٥١
Kingdom of Saudi Arabia - P.O. Box 3337 - Hay Al Hamra - Additional No. 8478 - King Salman Road - Tel. +966 12 273 5550 - Fax +966 12 273 5550 - C.R. 1010431451

اسم المشروع : إنشاء مركز الوثائق والمحفوظات والأرشيف المشروع : ..... نموذج رقم (1)

ARCH VIEW COMPANY

شركة أساس لتطوير وتشغيل المدن الصناعية
ASAS for Developing & Operating Industrial Cities

شركة ارك فيو للاستشارات المهنية	شركة أساس لتطوير وتشغيل المدن الصناعية	شركة الباسل للمقاولات
الاستشاري	المالك	المقاول

طلب إعتمـــــاد مخططات تنفيذيه REQUEST FOR SHOP DRAWING APPROVA

رقم التقديم		نوع التقديم	إعادة تقديم	تاريخ التقديم:	25-04-2024
اسم المبنى:	مبنى الأرشيف	رقم المبنى		جزء المبنى	صاله الأرشيف
نوع المخطط		التقديم السابق:		نوع التقديم	حسابات نظام الإطفاء والمخططات تصميمية
موضوع التقديم					

م	اسم المخطط	المنطقة	كود اعتماد المخطط	تاريخ المخطط
1	نظام الإطفاء بالغاز (full layout)	صالة الأرشيف		
2	Detectors & Notification	صالة الارشيف		
3	Isometric for Lengths & Diameters part 1	صالة الأرشيف		
4	Isometric for Lengths & Diameters part 1	صالة الأرشيف		
5	Layout view pipes lengths & Diameters	صالة الأرشيف		
6	S.L.D Riser Diagram & Design data			
7	HFC227 ea system (shop drawing)			

توقيع و ختم المقاول: Contractor's Stamp & Sin

إقرار المقاول :يتعهد المقاول بأن التقديم ملتزم التزاما تاما بمواصـــــفات العقد

المهندس المقاول المختص:	مدير المشروع المقاول :	التاريخ:
الاسم :	الاسم : محمد ضوابه	
التوقيع :	التوقيع :	ختم المشروع

ملاحظات و توصيات الإستشاري : Consultant's Stamp & Comments

☐	كود (A)	التوصية بالموافقـــه على المخطط بدون ملاحظات
☑	كود (B)	التوصية بالموافقة على المخطط مع ملاحظات
☐	كود (C)	التوصية بالرفض للمخطط مع إعادة التقديم
☐	كود (D)	يعاد لعدم كفاية أو إكتمال المعلومات

- لا مانع من اعتماد حسابات ومخططات إطفاء الحريق بنظام FM200 لصالة الأرشيف
- ضرورة توضيح كيفية تثبيت ماسورة وخرج الغاز السفلي لكابلات الفروع السفلية.
- ضرورة عمل النظام تحت مسئولية المقاول وبشركة المتخصصة من تحت نظام FM200 وذلك وفقا للكود السعودي SBC801 والمبادئ NFPA

يجب الالتزام بالمواصفات و الكميات و الشروط العقدية ,الالتزام باشتراطات الكود السعودي للبناء, الالتزام بتوصيات الدفاع المدني و السلامة العامة

المهندس الاستشاري المختص:	مدير المشروع الاستشاري :	التاريخ:
الاسم : صبحي الحكم	الاسم : أحمد عباس	
التوقيع :	التوقيع :	ختم المشروع
المهندس الاستشاري المختص:	مدير المشروع الاستشاري :	التاريخ:
الاسم :	الاسم : أحمد عباس	
التوقيع :	التوقيع :	ختم المشروع

ارك فيو للاستشارات المهنية ARCH VIEW CO. قسم الإنوار

اعتماد المخططات لا يعفي المقاول من التزاماته التعاقدية

ممثل المـــــالك:	رئيس قسم الإنشـــــراف	التاريخ:

ZUHAIR FAYEZ PARTNERSHIP CONSULTANT	وزارة الدفاع MINISTRY OF DEFENSE	MASAH CONTRACTING CO. شركة مسح MASAH CO. SUB CONTRACTOR

MATERIAL SUBMITTAL

PROJECT NAME: SUPPORTING BUILDINGS PROJECT PHASE-2 ZONE-B

SUBJECT: TECHNICAL SUBMITTAL OF FM-200 SYSTEM BY M/s. CONTRACTOR SERVICES CO.

B.O.Q. Code Ref.	ATTACHMENT INCLUDES:	
	A TECHNICAL SUBMITTAL HARD AND SOFT COPY.	Submittal No. Q5-PH2-ZB-ME-MT-091 Date Received: 25/5/2022 Date Returned:

Sub-contractor
Name: MASAH CONTRACTING CO. Address: P.O. Box 272000 Riyadh 11352, Kingdom of Saudi Arabia
Address: Phone: 966 55 500 3427 Telex: +966 011 215 7554

Manufacturer		Supplier/Agent	
Name:	CSC	Name:	CSC
Address:	P.O BOX:41 2 ®, Al Riyad h,1152 K.S.A	Address	P.O BOX:41208, Al Riyadh,1152 K.S.A
Phone:	+966 11 4713176	Phone:	+966 11 4713176
Fax:	+966 11 2420140 Telex:	Fax:	+966 112420140 Telex:

Information submitted and attached:

Certificates	☐	Operation & Maintenance Manual	☐
Technical Brochure	☐	Spare Parts List	☐
Manufacturer's Data & Specs.	☐	As Built Drawings	☐
Shop Drawings	☐	Warranty	☐
Samples	☐	Others (specify)	☐

Contracter's Comments:

PQD OF M/s. VOLTMATIC CO. IS ALREADY APPROVED AS SUPPLIER IN MODA UNDER SUBMITTAL NO.: Q5-PH2-ZB-ME-DC-087

Note: This review does not relieve the contractor Of his responsibilities under the terms of the contract nor authorize additional compensation.

(Contractor) Signature: Date: 23/05/2022

Consultant's Comments: (1) FM-200 System Component/Items from CSC is acceptable, subject to following:
(a) Final component list shall be as per the calculations & Shop-drawings, Submit Calculations & Shop-drawings for the items mentioned by FM-200.
(b) Electrical Control panel & other items (detectors, Alarm, Cabling etc..) shall be verified & Approved by electrical department.
(c) Final Approval is subject to client's acceptance.

See Attachment ☐

Status:		Discipline	Sign & Date	Resident Engineer	Client Note
A - Approved	☐	☐ Arch			
B - Approved as noted	☑	☐ Civil		Sign:	Sign:
C - Revise and submit	☐	☑ Mech	Mr. Ibrahim 24/5/22	Date:	Date:
D - Rejected	☐	☐ Elect	Tuesday 24/5/22	Name:	Name:
E - Noted/ NA	☐	☐ HVAC			
		☐ LS			

Remarks
1. The drawings and materials submitted by the contractor should be covered by the contract value. Any additional materials or drawings should be mentioned in the submittal.
2. Copies and Attachments: Original (For Consultant), Copy No. (1) (For Consultant), Copy No. (2) (For Site Manager).

ZUHAIR FAYEZ PARTNERSHIP CONSULTANT	وزارة الدفاع MINISTRY OF DEFENSE	MASAH CONTRACTING CO. شركة مسح MASAH CO. SUB CONTRACTOR

DOCUMENTS SUBMITTAL

PROJECT NAME: SUPPORTING BUILDINGS PROJECT (PHASE-2) ZONE-B

SUBJECT: PRE-QUALIFICATION OF M/s. CONTRACTOR SERVICES CO. FOR TRADING & CONTRACTING (CSC FIGHTING SERVICES & FM-200 SYSTEM.

B.O.Q. Code Ref.	ATTACHMENT INCLUDES: A. PQD DOCUMENTS HARD & SOFT COPY	Submittal No. Q5-PH2-ZB-ME-DC-089 Date Received: 18/5/2022 Date Returned:

Sub-contractor
Name: MASAH CONTRACTING CO. Address: P.O. Box 272000 Riyadh 11352, Kingdom of Saudi Arabia
Address: Phone: 966 55 500 3427 Telex: +966 011 216 7854

Manufacturer		SupplierAgent	
Name:	CSC	Name:	CSC
Address:	P.O BOX:41208, Al Riyadh,1152 KSA	Address	P.O BOX:41208, Al Riyadh,1152 KSA
Phone:	+966 11 4713176	Phone:	+966 11 4713176
Fax:	+966 11 2420140 Telex:	Fax:	+966 11 2420140 Telex:

Information submitted and attached:

Certificates	☐	Operation & Maintenance Manual	☐
Technical Brochure	☐	Spare Parts List	☐
Manufacturer's Data & Specs.	☐	As Built Drawings	☐
Shop Drawings	☐	Warranty	☐
Samples	☐	Others (specify)	☐

Contractor's Comments:

☐ See Attachment

Note: This review does not relieve the contractor Of his responsibilities under the terms of the contract nor authorize additional compensation.

(Contractor) Signature: Date: 18/05/2022

Consultant's Comments: Pre Qualification as a Contractor for 'CSC' for fire system can be acceptable subject to complying with specification & project requirements. Final approval is subject to client approval.

See Attachment ☐

Status:		Discipline		Sign & Date	Resident Engineer	Client Note
A - Approved	☐	☐	Arch			
B - Approved as noted	☐	☐	Civil		Sign:	Sign:
C - Revise and submit	☐	☑	Mech.	22/5/22	Date:	Date:
D - Rejected	☐	☐	Elect		Name:	Name:
E - Noted/ NA	☐	☐	HVAC			

Remarks:
1. The drawings and materials submitted by the contractor should be covered by the contract value. Any additional materials or drawings should be mentioned in the submittal.
2. Copies and Attachments: Original (For Consultant), Copy No. (1) (For Consultant), Copy No. (2) (For Site Manager).

ترويسة المقاول	شعار المقاول	
اسم المقاول : شركة العيوني للاستثمار والمقاولات	شركة العيوني للاستثمار و المقاولات العيوني AL-AYUNI AL-AYUNI INVESTMENT & CONTRACTING CO.	اسم المشروع : اعمال تنفيذ البنية التحتية والمرافق المساندة لرادارات القطاع الشمالي الجهة المستفيدة :القوات الجوية الملكية السعودية الموقع : محطة رادار جبل اللوز رقم العقد :41/9/هـ

طلب اعتماد عينات

رقم الطلب:79		التاريخ : 12/ 02 /1444هـ
اسم المادة	رقم البند في جدول الكميات	الوصـــــــف
نظام اطفاء الحريق بنظام الغاز (HFC227ea)		**1- شركة اعمال المقاولين للتجارة والمقاولات (CSC)**
مهندس المقاول:	التوقيع:	وقت وتاريخ التسليم :1444/02/12هـ 10.00 ص
توقيع المهندس المشرف		

شركة العيوني للاستثمار والمقاولات
مشروع البنية التحتية والمرافق المساندة لرادارات القطاع الشمالي
INVESTMENT AND CONTRACTING
FACILITIES FOR NORTH SECTOR RADARS
35 – 20 – 490 – 1526
Al-Ayuni Investment & Contracting Co.

اعتمادات الإشراف

☑ موافق	☐ غير موافق	☐ موافق بشروط

الملاحظات والتوصيات :

* يتطلب تقديم الضمانات وكتيبات التشغيل والصيانة وتدريب المختصين على الأنظمة والإلتزام بمواصفات العقد وإجراء كافة الإختبارات من المورد قبل تسليم المشروع *

التاريخ :	توقيع المهندس المشرف::النقيب المهندس هانى سعد
الوقت :	توقيع المهندس المختص
	توقيع مدير قسم الدراسات والاشراف المقدم المهندس ريان الشريف عنه

CLIENT:-	CONSULTANT:-	Contractor:
nwc	Hamoud Saleh AL-Jarba Engineering Consulting	Giza Arabia

PROJECT NAME:- توريد وتركيب وتشغيل وإشراف نظام الإنذار والإطفاء الآلي بمحطة الخدمات البيئية بالرياض

MATERIAL SUBMITTAL

Ref. No.: F.F-007 | Rev 0 | Date: 05 10 22 | ■ New Submittal ☐ Resubmittal

☐ Architectural ☐ Electrical ☐ Civil ☐ Others | Specs. No
☐ Structural ■ Mechanical ☐ Interior Design | Drwg. No.

Please find enclosed the following documents/drawings:

No.	Description*	Manufacturer	Supplier	No of Catalogue	Code
1	FM200 SYSTEM	AVENGER FIRE SUPPRESSION SYSTEM	CSC CO.	1	

*Description: (Manufacture, Model, Type, Size, Colour, etc.)

■ Catalogue ☐ Drawing ☐ Sample ■ Certificate ☐ Calculation ☐ Document

شركة جيزة العربية للأنظمة جيزة ١٠١٠٢١٦٤١٥ س.ت:

Having checked this submittal, we certi that it confirms to requirements of the Contract Documents in all respects, except as otherwise indicated here in.

Material Engineer /Name & Signature: _____ Technical Manager: _____

Received by: Name: Eng. AHMED SAADEDDIN Date: 05-10-2022 Signature: _____

Remarks / Comments:

All parts to be installed Must Comply with Attached UL Certificates.

شركة حمود صالح الجربا للاستشارات الهندسية ترخيص رقم: ٥١١٠٠٠١٦٢١ س.ت: Consultant Head Office

Status: A Approved | B Approved as noted | C Approved as noted submit again | D Disapproved resubmit | E Not Action

Date	Project Manager Name & Signature of Engineer	Date Name & signature
06-10-2022	Eng. AHMED SAADEDDIN	

HOUSE OF CONSULTING OFFICE

Drawing Transmittal Sheet
IT Room

Project Name	Film Crew Lodge Phase 2 & 3	Client	Royal Commission for Al-Ula
Project No.	PR6870	Contractor	Red Sea International (RSI)
Location	Al-Ula		

Submittal No.	Multiple	New Submittal	■	Date	25-Aug-23
Rev. No.	00	Re-Submittal		Previous Submittal\Rev. No.	

Discipline

☐ Architectural ☐ Civil ■ Electrical ☐ Telecom ☐ Structural

☐ Firefighting ☐ HVAC ☐ Interior Design ☐ Plumbing ☐ Mechanical

Please find enclosed the following Documents/Drawing:

S\N	Drawing No.	Rev No.	Description\Title	Code
1	MP2MGDMMD1004-RSH-XX-RB-000-DG-HS-150002	00	IT Room - Fire Suppression System Layout	B
2	MP2MGDMMD1004-RSH-XX-RB-000-DG-HS-150003	00	IT Room - Fire Suppression System Layout	B
	See the comments in the attached excel sheet			

Submitted for

☐ ■ Approval ☐ Further Action ☐ Filing ☐ For Information ☐ Other

Comments

Approval Status (Code)

A	Approved	B	Approved as Noted Resubmittal is Not Required	C	Approved as Noted Resubmittal is Required
D	Disapproved	N	No Action		

Submitted By	Red Sea Document Controller Red Sea International	Checked\ Approved By	
Date	25-Aug-23	Date	

FORM: F-OP-22 REV: 8 DATE: 16-09-2020

CLIENT	ROYAL COMMISSION FOR ALULA	الهيئة الملكية لمحافظة العلا Royal Commission for AlUla
CONSULTANT	HOUSE OF CONSULTING OFFICE	HCO
	ATKINS	ATKINS

OCCUPANCY CLASSIFICATION	GROUP - B
OCCUPANT LOAD	1
TYPE OF CONSTRUCTION	II-B

BUILDING PROFILE

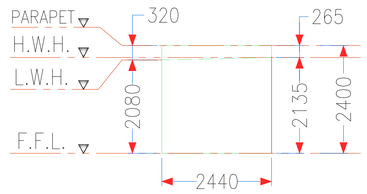

LEGEND / NOTES:

FITTINGS:
SHALL BE OF TYPE ASTM A234 GR. WPB
FOR 2½" SIZES AND LARGER AND SHALL BE
OFTYPE THREADED GALVANIZED FORGED STEEL
WITH ASTM A105,CLASS 3000 FOR 2" SIZES
AND SMALLER.

ITEM	DESCRIPTION	QUANTITY
1	25mm 90 DEGREE ELBOW	03

MATERIAL LIST FIRE SUPPRESSION SYSTEM-IT ROOM

ITEM	DESCRIPTION	MANUFACTURER
1	CYLINDER WITH VALVE C/W TOP PLUG ADAPTER	AVENGER
3	CYLINDER STRAP	AVENGER
4	LATCHING SOLENOID	AVENGER
5	LOCAL MANUAL CONTROL HEAD FOR 383L018	AVENGER
6	PRESSURE SUPERVISORY SWITCH (N/C) 360 PSI	AVENGER
7	FLEXIBLE HOSE	AVENGER
8	CAUTION-ROOM PROTECTED	AVENGER
9	NOZZLE ALUMINUM	AVENGER

PIPES :
SHALL BE OF TYPE STEEL
WITH ASTM A53, GR.B, SCH40,
SEAMLESS/ERW

ITEM	PIPES	LENGTH (METER)
1	25mmø	3.010

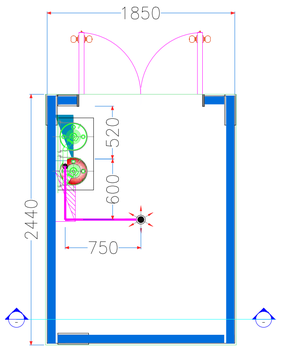

FF SYSTEM LAYOUT- IT ROOM
SCALE 1:75

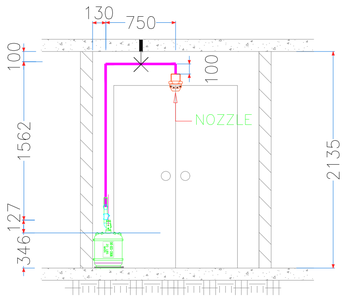

SECTION - IT ROOM
SCALE 1:75

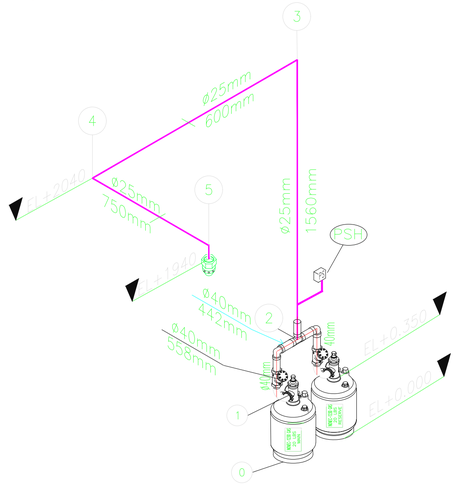

FF SYSTEM ISOMETRIC DIAGRAM- IT ROOM
SCALE NTS

S.NO.	HAZARD NAME	WIDTH (m)	LENGHT (m)	HEIGHT (m)	VOLUME (m^3)	MINIMUM DESIGN CONCENTRATION	AGENT REQUIRED PER CYLINDER	CYLINDER QTY.	AGENT REQUIRED	NOZZEL QTY.
1	IT ROOM	1.850	2.440	2.140	9.659	7.0%	20LBS	2	40LBS	1

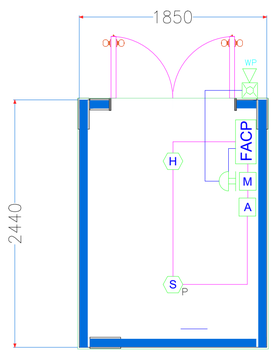

FIRE ALARM SYSTEM LAYOUT- IT ROOM
SCALE 1:75

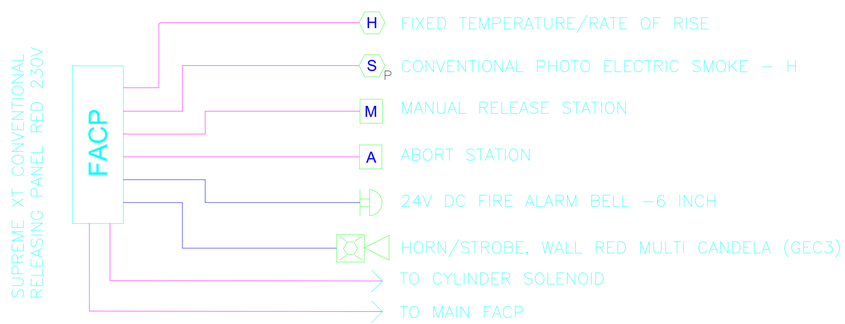

FIRE ALARM SYSTEM RISER DIAGRAM - IT ROOM
SCALE NTS

FIRE SUPPRESSION SYSTEM (SHEET 1 OF 2)

VIEW SCALE 1:35 METERS

APPROVED FOR SUBMISSION TO CLIENT

		DATE
CONTRACTS:		
ENGINEERING:		

CLIENT APPROVAL

APPROVED BY:	
DATE APPROVED:	
APPROVAL TYPE:	

APPROVAL TYPE:
A - APPROVED.
B - APPROVED AS NOTED, RESUBMITTAL ISN'T REQUIRED.
C - APPROVED AS NOTED, RESUBMITTAL IS REQUIRED.
D - DISAPPROVED.
N - NO ACTION.

CONSULTANT APPROVAL (CONSULTANT SUPERVISOR)

APPROVED BY:	
DATE APPROVED:	
APPROVAL TYPE:	

REV. NO.	DESCRIPTION	DATE	BY
00	FOR CLIENT APPROVAL	16 AUG 2023	FH

CLIENT NAME:	ROYAL COMMISSION AL ULA (RCU)
WORK ORDER NO.:	90-1222-0051
DRAWING TITLE:	IT ROOM
MODEL NUMBER:	RSS-2-72865
QUANTITY:	6 EACH
SPECIFICATION:	FIREMASTER SERIES
VOLTAGE/CYCLE:	400/230V, 3Ph., 60Hz., 4W+G
BUILDING SIZE:	1850mm x 2440mm
PROD. SERIAL NO.:	25538 to 25540 (P2) 25541 to 25543 (P3)

RED SEA International

DRAWN BY:	FH		
CHECKED BY:	AN		
APPROVED BY:	AZ		
DATE:	22 AUGUST 2023		
SCALE:	1:50	SIZE:	A4
SHEET NO.:	E311		

DOC. NO.:	MP2MGDMMD1004-RSH-XX-RB-000-DG-HS-150002	REV:	00

Service Contract for Fire Safety & Alarm

Between
Saudi German Hospital Riyadh, the Middle East Healthcare Company
and
Contractors Services Company

The Undersigned:

1. Saudi German Hospital Riyadh, the Middle East Healthcare Company having its registered office at P. O. Box 84348, Riyadh 11671, represented in this matter by its Chief Executive Officer, Mr. Abdul Fattah Hassanein (**"First Party"**)

   and

2. **Cntractors Services Company**, having its registered office at P.O. Box 41208, Riyadh, Tel. 011-4713176 , Fax 011-2420140 (CR # 1010142491), Kingdom of Saudi Arabia , represented in this matter by its Executive Manager Eng. Magdi Abdul Aziz (**"Second Party"**)

Whereas:

1. The First Party is engaged in healthcare provision through its tertiary care general hospital located at King Fahad Road, Al-Sahafa District, Riyadh – 11671, Saudi Arabia.
2. The Second Party engaged in supplying and providing service Fire Fighting system.
3. By means of the Request for Proposal of This contract # 141844 dated 27-07-16.
4. The Parties reached an agreement on that basis and wish to enter into an agreement (details have been written in subsequent sections).

Scope and Nature of Services to be provided: This agreement is made to provide the following services to the Client by the Second Party:

1. A - Four (4) PPM visit per year
2. B – Unlimited Emergency Calls on-site repair
3. C – Will train First Party's Maintenance personnel on rescue procedures of First line Trouble shooting.
4. Inspect, Test, Maintain, and Certify the fire alarm systems detailed on the "List of Equipment" below for the First Party. The Contractor will satisfy requirements of the lasted edition of National Fire Protection Association (NFPA), conform to the equipment manufactures *recommendations, and verify operation of the fire alarm systems.*

S.No	System Description
1	Fire Alarm Maintenance (Zeta Addressable, Gent Addressable And Gamewell 8 Zone)
2	Fire Fighting Maintenance
3	Kitchen Wet System
4	FM200 System (3 Rooms)
5	CO2 System (2 Rooms)
6	Water System (Sprinklers And Fire Hose)

Terms and Conditions of the Contract:

1. **Definitions:**

   A – (4) PPM means Second Party shall make 4 Preventive Periodic Maintenance visit in a year to First Party to minimize equipment repair and emergency services and allow system to function at its peak performance.

   B – Emergency any sudden Breakdown of Equipment during routine operations.

   C – Trouble Shooting covers Electronic controls, Networking & Alarm Panels.

2. **Provision of Services:**

   a. **General Obligations of the Second Party:**

   b. Second Party shall provide a written report to the First Party on the 2nd day of each visit of PPM and Emergency.

11/8/2016

30/08/2016

c. Second Party will be responsible for any mishap during the inspection or service due to negligence of Technician/Engineer.
d. Second Party shall maintain equipment in accordance with manufacturer recommendation.
e. Ensure adherence to all relevant client Environmental, Health and safety Regulations, Code of Conduct and policies and procedures.
f. Second Party shall use standard tools & Supplies which is approved by NFPA to perform the required job and ensure all satutory inspection are carried out.
g. Second Party shall respond to the First Party's Emergency request within 24 hours.
h. Second Party shall provide separate quotation for spare parts if needed.
i. Second Party shall submit invoice for the services to be provided.

3. **General Obligations of the First Party:**
   a. In case of emergency or any abnormal operation and/or stoppage of subject equipment it is the responsibility of the First party to communicate with the Second Party at the following contact Mobile : 0545103634 email address a.zakaria@csc.com.sa
   b. First Party shall pay the Maintenance charges SR 70,000/- in 2 equal installments in advance as agreed thru previous contract reference # QT 18193-08-16

4. **Contract duration – Continuation:**
   The period of this contract will start from 07-Aug-2016 to 06-Aug-2017 and it will be considered as automatically renewed with mutual understanding unless otherwise either party give a written notice prior 30 days of contract termination.

5. **Price:**
   Maintenance charges are fixed per year SR Seventy Thousand (70,000) per year only to be paid in 2 equal installments in advance.

6. **Governance:**
   a. The parties undertake to immediately inform one another of matters or circumstances that preclude proper performance of the Agreement.
   b. The parties will consult on the level of department / Supply chain managers in accordance with the requirement of this contract.
   c. A written report will be compiled of each consultation by the department/service manager of the First Party of Second Party (depending on where the meeting has held) as quickly as possible but within Three (3) working days, which will record at least any decision that are relevant to management of the agreement. This report will be submitted to the other party for comments, which will notify any comments within the same Three (3) working days. The report will then be adopted during the next consultation, if necessary indicating any points in the report over which the parties do agree.
   d. Communication between parties will take place in English otherwise agreed.

7. **Evaluating Methodology and Performance indicator(s) :**

   Average Breakdown time = number of hours equipment down divided by 180 days.
   Response time = sum of number of hours divided by total emergency calls.

8. **Monitoring:**
   a. **Reporting:** The Second Party shall provide the First Party the plan and scheduled route for each delivery, so as to facilitate monitoring of performance of all work to be conducted under this Agreement. All employees of the Second Party shall perform their duties in accordance with the scheduled plan and routes assigned to them.

   b. **Second Party Authorization:** The second party shall submit to the First Party a copy of valid Commercial Registration (CR), Saudi Food and Drug Authority (SFDA), Saudi Standards, Metrology and Quality Organization (SASO) certificates, Manufacturer authorization(s) and any other certificate if available.

11/8/2016

30/08/16

10. **Liability:**
    a. If First Party fails to make payment within the prescribed time, the Second Party will have the right to suspend any service until and unless due payments received by the Second Party.
    b. If Second Party fails to comply with the clauses mentioned under the section of Obligations then the First Party reserves the right to report to the Government accredited authorizations.
11. **Force Majeure:**
    A party shall not be liable for any failure or delay in the performance of this Agreement for the period that such failure or delay is due to causes beyond its reasonable control, including but not limited to acts of God, war, strikes or labor disputes, embargoes, government orders or any other force majeure event.
12. **Confidentiality:**
    The terms and conditions of this Agreement are absolutely confidential between the parties and shall not be disclosed to anyone else, except as shall be necessary to effectuate its terms. Any disclosure in violation of this section shall be deemed a material breach of this Agreement.
13. **Termination:**
    The period of this contract is one (1) year from the date of signature and stamps from the both parties and it will be considered as automatically renewed with mutual understanding unless otherwise either party give a written notice prior 30 days of contract termination.
14. **Dispute Resolution Procedure:**
    This Agreement shall be governed by provisions of regulations prevailing in Saudi Arabia. Disputes arising between the parties concerning the interpretation of the agreement shall be reconciled through Saudi Court Riyadh.

    Both parties confess that the addresses written in the beginning of this contract are the chosen locations for each and any messages sent to those addresses are rightful, legal, effective and incontestable.

In witness thereof, the parties hereto have set their hands on the date stated below.

First Party (Saudi German Hospital Riyadh)

Fire & Safety Officer	**Eng. Abdul Rauf Bhatti** Maintenance Manager	**Mr. Gaber A. Gaber** Legal Officer
Dr. Amir Rizwan Group QPS Director	**Mr. Rana Sher Muhammad** Procurement Manager	**Mr. Abdel Fattah Hassanein** Chief Executive Officer

Second Party (Contractors Services Company)

Eng. Magdi Abdul Aziz
Executive Manager
11/8/2016

ALHaddad Mohammad
AECOM

Final (WF-070107) 14-4800000344/000-IN-Construction -… 12:39 AM
WORKFLOW TRANSMITTAL ACM-WTRAN-126877

14 Outer Regions
Riyadh, KSA
Riyadh
Saudi Arabia

AECOM Delivering a better world

MAIL TYPE	MAIL NUMBER	REFERENCE NUMBER
Workflow Transmittal	ACM-WTRAN-126877	ACM-WTRAN-126877

Final (WF-070107) 14-4800000344/000-IN-Construction - IFR

From	Mr ALHaddad Mohammad - AECOM
To (2)	Mr ALHaddad Mohammad - AECOM (+1 more...)
Cc (7)	Mr Abdulrahman AlQarni - AECOM (+6 more...)
Sent	Friday, 14 April 2023 12:39:41 AM AST (GMT +03:00)
Status	N/A

DOCUMENT ATTACHMENTS (2)

(**2** selected)

File	Document No	Revision	Revision Date	Title	Status
	14-371200-4800000344-BEI-FPR-CRS-000019	01	06/04/2023	4800000344/000 - Technical Submittal for Fire Suppression System - (Avengers-USA)	B - Incorporate Comments - Proceed
	14-371200-4800000344-BEI-FPR-MAT-000005	01	06/04/2023	4800000344/000 - Technical Submittal for Fire Suppression System - (Avengers-USA)	B - Incorporate Comments - Proceed

MESSAGE

Workflow Review History

The attached documents have completed the "14-4800000344/000-IN-Construction - IFR" workflow with the following results :

This transmittal was automatically generated.

Doc No	Step	Participant	Review Outcome	Comments

14-371200-4800000344-BEI-FPR-CRS-000019	NEOM/AECOM_Review	A Mohammad	B - Incorporate Comments - Proceed	see crs
14-371200-4800000344-BEI-FPR-MAT-000005	NEOM/AECOM_Review	A Mohammad	B - Incorporate Comments - Proceed	see crs

Document Submittal Form

Contractor	Beijing Emirates International Construction Company	Document submittal no.	**14-371200-4800000344-BEI-FPR-CAL-000002_01**
Contract no.	4800000344/000	Date	15-Mar-2023
To PMC	AECOM		

Document no.	Type	Description	Rev no.	Action required
14-371200-4800000344-BEI-FPR-CAL-000002	Calculation	4800000344/000 - Novec System Capacity Calculation for Data Room (GF-26)	01	☒ Approval ☐ Comments ☐ Information ☐ Other
				☐ Approval ☐ Comments ☐ Information ☐ Other
				☐ Approval ☐ Comments ☐ Information ☐ Other

Contractor authorized signatory.

Name	Amir Afifi	Date	15-Mar-2023
Signature			

PMC s comments

Status code	☐ No exception taken ☐ Rejected	☐ Exception as noted revise and resubmit for record ☐ Review not required	☐ Revise and resubmit ☐ Issued for Construction
Engineer's name		Date	
Signature			

Received by Contractor

Name		Date	
Signature			

NEOM نيوم

CALCULATION REPORT

4800000344/000 - Novec System Capacity Calculation for Data Room (GF-26)

14-371200-4800000344-BEI-FPR-CAL-000002_01

15-Mar-2023

Document history

Revision code	Description of changes	Purpose of issue	Date
01	First Submission	For Approval	15-Mar-2023

Document approval

	Prepared by	Reviewed by	Approved by
Name	Hussein Hamdy	Hussein Hamdy	Amir Afifi
Job Title	Technical Director	Technical Director	Project Manager

قنوات التوريد للمقاولات
س ت 1010415296

SUPPLY CHANNELS
WWW.SUPPLYCH.COM

اعتماد مواد / بند

اسم المشروع ورمزه	تأمين المتطلبات لاضافة وزارة العدل	رقم العينة	
المقاول الرئيسي المنفذ	شركة ارصكوم	المقاول من الباطن ان وجد	م. قنوات التوريد
تاريخ تقديم العينة	١٨/٤/٢٠٢٠	رقم المنتج ان وجد	٧١ بوجه
رقم المخرج		رقم المرحلة	رقم واحد

معماري ( ) انشائي ( ) كهربائي (✓) ميكانيكي (✓) الكتروني (✓) اخرى ( )

الوصف	الموافقات :	
توريد وتركيب نظام نظام منع الحريق FM 200 HFC 227	(✓) كتالوج (✓) شهادات ( ) مخططات حسب الموقع ( ) رسومات تنفيذية	(✓) مواصفات المصنع (✓) الضمان ( ) عينات ( ) اخرى تذكر

المصنع	شركة اعمال المقاولين CSC	المورد	م. قنوات التوريد

ملاحظات المقاول المنفذ	يتم تجهيز غرفة التخزين المعلومات في مبنى وزارة العدل من نظام منع الحريق - طبقاً للمواصفات المطلوبة
مختصة / مدير المشروع قنوات التوريد	الاسم فالح العميري التوقيع ..... الختم .....
الجهة / العميل	فهد الحسن - وزارة العدل المدينة الرياض
راجع المواصفات من الجهة المشرفة	الاسم فهد الحسن التوقيع .....
اعتماد مدير / مالك المشروع من الجهة المشرفة	الاسم حسان عبدالله التوقيع ..... الختم .....

Thank you for Your Business

المكتب الرئيسي : الرياض 11372 ص.ب. 301648 . هاتف : 0112296256 فاكس : 0112295126 س . ت 1010415296
Head Office : Riyadh 11372, P.O Box 301648 Tel : +966 (11) 2296256 Fax : +966 (11) 2295126 C.R 1010415296
WWW.SUPPLYCH.COM

Scanned with CamScanner

GCT غنتوت لتطوير الانشاءات والنقل Ghantoot Construction and Transport Development

MATERIAL SUBMITTAL FORM - MSF

SALFO AND ASSOCIATES SA Engineering & Management Consultants

Project Name: Construction of Residential Buildings C4	**Ref. No.:** C0504/MSF/C4/F/FA/002	**Rev.:0**
Project Location: Entertainment City, Lusail	**Date of Issue:** 08 December 2016	
Consultant: SALFO	**Project Manager: Ahmed Tarek**	
Main Contractor: Ghantoot Construction & Transport Development	**Sub-contractor:** Khalid Bin Nasser (KBN)	
Specification Reference: QCS 2010 Section 23 Part 4.6	**Discipline:** Mechanical – Firefighting	

Discipline: **Architectural** ☐ **Civil / Structural** ☐ **MEP** ☒ **Others** ☐

Attachments: **Product Data Sheet** ☒ **Catalogues** ☒ **Samples** ☐ **Compliance Statement** ☐

Others ☐ **Please specify:** **2 hard copies/1 CD**

Material Description: FIRE ALARM SYSTEM	**Manufacturer:** AVENGER	
Specified Material: N/A	**Supplier:** REGENCY	**Proposed Material Same as specified: (Yes/No):** Yes
Alternate Proposed Material (in case if the proposed Material deviated from the specification): N/A	**Manufacturer:** AVENGER	**Supplier:** N/A
Reason of Deviation: (if Any) N/A		
Contractor Authorized Signature: Ahmed Tarek Raslan		**Date: 08 December 2016**

RECEIVED 10 DEC 2016 SALFO QATAR

Consultant Comments:	**Approval Status:**
As per our attached Comments Sheet. P. KOSTOPOULOS 02/02/2017.	☐ A- Approved ☒ B- Approved as noted ☐ C- Reject & Resubmit
Consultant Authorized - Name /Signature: CR	**Date:** 04/02/2017

Client's Approval Required: ~~(Yes /~~ No): NO.

Clients Comments:	**Review Status:**
	☐ No Objection ☐ Accepted with comments ☐ Not Accepted
Client Authorized Signature:	**Date:**

SALFO & Associates SA
C4, C5, C6, FV9A
DATE 10-12-16
REF. NO 3937

DISTRIBUTION	ACTION	INFO
Proj. Director		
Proj. Manager		✓
Civil		
MEP	✓	
QA QC	✓	
Contracts		
Planner		

PROJECT	: C4 RESIDENTIAL BUILDING (2B+G+10F)
SUBMITTAL Ref. No.	: C0504/MSF/C4/F/FA/002 Rev.0
Date of Issue	: 08/12/2016
Material Description	: Fire Alarm System
Manufacturer	: AVENGER / USA
Supplier	: REGENCY / QATAR

COMMENTS SHETT

1. QCDD Product Approvals for all proposed Fire Alarm Equipment, should be valid at the date that QCDD will inspect the Project Fire Alarm and Fire Fighting Systems Installation. In case any of the submitted QCDD Product Approvals is no longer valid at that date, Contractor should have in advance provide Consultant with new (valid at that date) QCDD Product Approval, to be attached in Consultant Application to QCDD for Inspection of Fire Alarm and Fire Fighting Systems Installations.
2. Submitted Cause & Effect Matrix should follow relevant Cause & Effect Matrix of Design Drawing. Please provide compliance statement or refer the deviations and the reasons caused to such deviations.
3. Test Certificates and Certificate of Origin should be transmitted along with any product delivery to site and should be attached to any relevant Material Inspection Request (M.I.R.).
4. Manufacturer instructions for transporting, handling, storage, installation, commissioning, testing and maintenance should be also submitted along with every product delivery at site and should be also attached to any relevant Material Inspection Request (M.I.R.).
5. Material Submittal approval by the Consultant is subject to relevant final approval or rejection by QCDD.

SALFO MEP Engineer

P. MOSTOPOULOS

02/02/2017.

SALFO AHD ASSOCIATES SA
Engineering & Management Consultants

Development by

TDM

GCT SITE - C0504

DISTRIBUTION	ACT	CONT	INFO
HO			
Project Manager			
Engineering			
Construction			
QAQC			
HSE			
MEP	✓		
Planning			
Contracts			
File			
SC	✓		
QS			
SK			
TK			

ENGINEER'S
Document Transmittal Information

Contract:

C4, C5, & FV9

Transmittal Number:

UD-143-DTI-768

5-Feb-17

FORWARDED TO:

M/s. Ghantoot Construction & Transport Devt.

Attn. Engr. Anas Assasah
Project Manager

1. Approved	Work May Proceed.
2. Approved W/Comm.	Work may Proceed subject to incorporation of comments indicated.
3. Revise & Resubmit	Revise and resubmit. Work may not Proceed.
4. Reject	Work Rejected. Work may not Proceed
5. For Information	For Information

CC:

DOCUMENT NO.	CONCTRACTOR REF.NO.	Rev	DESCRIPTION	Code
3997	C0504-MSF-C4-F-FA-002	0	FIRE ALARM SYSTEM	2
4082	C0504-MSF-C4-F-FF-002	0	FM 200 SYSTEM	2
4081	C0504-MSF-C4-F-FF-003	0	FIRE FIGHTING GROOVED & THREADED GI FITTINGS	2

ANY APPROVAL, CHECK, CERTIFICATE, CONSENT, EXAMINATION, INSPECTION, INSTRUCTION, NOTICE, PROPOSAL, REQUEST, TEST, OR SIMILAR ACT BY THE ENGINEER (INCLUDING ABSENCE OF DISAPPROVAL), SHALL NOT RELIEVE THE CONTRACTOR FROM ANY RESPONSIBILITY HE HAS UNDER THE CONTRACT, INCLUDING RESPONSIBILITY FOR ERRORS, OMMISSIONS, DISCREPANCIES AND NON COMPLIANCES.

REMARKS

Please find the attached reference: C0504-MSF-C4-F-FA-002, C0504-MSF-C4-F-FF-002, C0504-MSF-C4-F-FF-003

ISSUED BY	DESIGNATION	SIGNATURE
Christos Roussounidis	Project Manager	CR 05/02/2017

CONTRACTOR'S ACKNOWLEDGEMENT RECEIPT

RECEIVER'S SIGNATURE:	DESIGNATION:	DATE
		5/2/2017

RECEIVED 05 FEB 2017

SALFO AND ASSOCIATES SA
Engineering & Management Consultants

AL ASMAKH
REAL ESTATE DEVELOPMENT

GCT
غتوت لتطوير الانشاءات والنقل
Ghantoot Construction and Transport Development

KBN
Khalifa Bin Nasser

آيسترن سنيرجي
Eastern Synergy

ENTERTAINMENT CITY BUILDING C0504-04 (C4)

TRANSMITTAL

S/N	Document Ref		Drawing Ref		Description	Copy	Format	Status
	Ref. No.	Rev	Ref. No.	Rev				
8.	C4-SB-ESC-MT-E-25	0			MS-FIRE ALARM SYSTEM	3 hard copy/2soft copy		
9.	C4-SB-ESC-MT-M-PL-10	0			MS-CATCH BASIN,PLANTER DRAIN ,VENT CAP	3 hard copy/2soft copy		
10.	C4-SB-ESC-MT-M-PL-11	0			MS-CONDENSATE DRAIN PIPES & FITTINGS	3 hard copy/2soft copy		
11.		0						
12.		0						
13.	C4-SB-ESC-MT-E-26	0			MS- WIRING DEVICES & ACCESSORIES/CEILING ROSE	3 hard copy/2soft copy		

Remarks:

PLEASE ACKNOWLEDGE RECEIPT OF THE LISTED ITEMS BY SIGNING AND RETURNING DUPLICATE COPY OF THIS FORM.

EASTERN SYNERGY CONTRACTING	KHALIFA BIN NASSER CONSTRUCTION AND DEVELOPMENT

Prepared by:	Wilven C. De Guzman	Verified by:	Mohamed Yassin	Approved by:	Ahmed Tarek
Company:	ESC	Company :	KBN	Company :	GCT
Designation:	Sr.QS/QC Engineer	Designation:	MEP Coordinator	Designation:	Project Manager
Date:	30/Nov/2016	Date:	30/Nov/2016	Date:	30/Nov/2016
Signature:		Signature		Signature	

Eastern Synergy
Projects Department

FOR DCC only:		Acknowledged Receipt by:
File Ref:		Signature:

RECEIVED 07 DEC 2016 GCT Document Control

OK
7.12.2016

C0504-MST-C4-F-FA-002

SALFO AND ASSOCIATES SA
Engineering & Management Consultants

AL ASMAKH
REAL ESTATE DEVELOPMENT

GCT
Ghanim Construction and Transport Development

Khalifa Bin Nasser

Eastern Synergy

ENTERTAINMENT CITY BUILDING C0504-04 (C4)

TRANSMITTAL

Project Name:	Entertainment City C4 - Project	Date:	30/Nov/2016
Project Number:	C4	Transmittal Ref:	2016-P001-111TR
Subject:	Material Submittal		

Attention To:	Engr. Ahmed Tarek	From:	Mohamed Yassin
Designation:	Project Manager	Designation	MEP Coordinator
Company:	GCT	Company:	KBN
Tel:	+974 40358282	Tel:	+974 40165864
Fax:	+974 44414751	Fax:	+974 40165869

WE ARE SENDING:		SUBMITTED FOR:		ACTION TAKEN:	
☐	Letter	☒	Approval	☐	Approved
☐	Shop Drawings	☐	Action	☐	Approved as Noted
☒	Material Submittal	☐	Review & Comment	☐	Revise and Resubmit
☐	Plans	☐	For Information Only	☐	Rejected
☐	Samples	☐			
☐	Specifications	SENT VIA:			
☐	Others	☐	Email	☐	By Courier
☐	Others	☒	Hand	☐	Fax

S/N	Document Ref		Drawing Ref		Description	Copy	Format	Status
	Ref. No.	Rev	Ref. No.	Rev				
1.	C4-58-ESC-MT-M-ACMV-11	0			MS-DIELECTRIC UNIONS & FLANGES	3 hard copy/2soft copy		
2.	C4-58-ESC-MT-M-ACMV-12	0			MS-PRESSURE INDEPENDENT CONTROL VALVE	3 hard copy/2soft copy		
3.	C4-58-ESC-MT-M-ACMV-13	0			MS-INERTIA BASE & VIBRATION ISOLATORS	3 hard copy/2soft copy		
4.	C4-58-ESC-MT-M-ACMV-14	0			MS- AIR VENT	3 hard copy/2soft copy		
5.	C4-58-ESC-MT-M-ACMV-15	0			MS- FLEXIBLE CONNECTOR	3 hard copy/2soft copy		
6.	C4-58-ESC-MT-M-ACMV-16	0			MS-THERMOMETER & PRESSURE GAUGES	3 hard copy/2soft copy		
7.	C4-58-ESC-MT-M-ACMV-17	0			MS-VALVES & ACCESSORIES FOR CHILLED WATER APPLICATION	3 hard copy/2soft copy		

SALFO AND ASSOCIATES SA
Engineering & Management Consultants

AL ASMAKH
REAL ESTATE DEVELOPMENT

GCT
غنوت لتطوير الانشاءات والنقل

KBN
Khalifa Bin Nassar

ايسترن سينرجي
Eastern Synergy

ENTERTAINMENT CITY BUILDING C0504-04 (C4)

MATERIAL SUBMITTAL FORM - MSF

MSF No.	C4-58-ESC-MT-E-25	Rev	00	☐	New submittal / Re-submittal	Date	30 Nov 2016

Material Description	FIRE ALARM SYSTEM							
Country of Origin	U.S.A	Specified	Alternative	Architecture	Structure	Electrical	Mechanical	Other
		☐	☑	☐	☐	☑	☐	☐

	Manufacturer	Local Supplier/Agent	Details
Name	AVENGER	REGENCY	FIRE ALARM SYSTEM
Tel	+974 44054135		
Fax	+974 44410373		
POBox	PO Box 22360		
Email:	Shorby.sanal@aafmq.com		

OK
7.12.2016

BOQ		BS		Specs	
Drawings ref.					

Attached	Data Sheet	Sample	Catalogue	Profile	Calculations	Test Results	Other
	☐	☐	☐	☑	☐	☐	

Prepared by	Name	Signature	Reviewed by	Name	Signature	Approved by	Name	Signature
(EASTERN SYNERGY)	Wilven C. De Guzman QA/QC		(KBN)	Mohamed Yassin MEP COORDINATOR		(GCT)	Ahmed Tarek PROJECT MANAGER	

ايسترن سينرجي Eastern Synergy ESC Projects Department

Received by Consultant

Name	Signature	Date

Consultant comments:

Approved	Approved With Comments	More Information Required	Rejected

	Name	Signature	Date
Commented by			
QA/QC			
Project Manager			

Received Back By the contractor			

EL AFIFI
HOUSE OF EXPERTISE

بيت الخبرة
العفيفي للإستشارات الهندسية
أ.د/ حكيم العفيفي

القاهرة في : ٢٠١٩/١٢/١٧
رقم القيد : 6177/19/SE/MB(61735)
السادة / شركة طيبة للتوريدات والهندسة

الموضوع : مشروع تطوير سجل المدني البحر الاعظم بالجيزة

تحية طيبة...وبعد...

بالإشارة إلى الموضوع أعلاه وإيماءً إلي خطابكم الوارد إلينا بتاريخ ٢٠١٩/١٢/١٦ لإعتماد اعمال الكهرباء وانظمة التيار الخفيف .

- نفيدكم علماً بالآتي :-

١. لامانع من اعتماد الكابلات ماركة السويدى .
٢. لامانع من اعتماد المواسير والبواطات من نوعية نيو إيجا .
٣. لامانع من اعتماد المفاتيح والبرايز من نوعية بتشينو من النوع الاوروبى وعلى أن يكون البرايز ٣ بول وليس ٢ بول مع أن يكون البرايز الخاصة UPS لون مختلف من النوع المجوف .
٤. لامانع من اعتماد وحدات إضاءة TU على أن يتم تقديم عينات قبل التوريد .
٥. لامانع من اعتماد نظام إنذار الحريق من نوع Avenger الإمريكى على أن يكون حاصل على اعتماد UL .
٦. لا يوجد توريد كابلات فى شبكة المعلومات ولا نظام الكاميرات ولا نظام الترقيم المرئى ويتم عمل مواسير فقط بشدادات .

مرسل للتكرم بالعلم واتخاذ اللازم ...

وتفضلوا بقبول فائق الإحترام...

بيت الخبرة
العفيفى للإستشارات الهندسية
أ.دكتور / حكيم العفيفي

بيت الخبرة
أ.د.دكتور حكيم العفيفي
سجل رقم: ٩١/١٢٧ قيد رقم: ٢/٢٥٣٦
قيد مكتب إستشاري رقم: ٢/١٤٦
بيت خبرة رقم: ٢٠
العفيفي للإستشارات الهندسية

صورة إلى :-
المهندس / محمد قنديل
م/ / على حسن
م./ أحمد ابراهيم
محمود بدوى

22 EL - Obour Buildings, Salah Salem st., First Floor, Cairo, Egypt.
Tel.: (+202) 24033477 -24030930 - 22637623
Mobile.: (0100) 668 81 39 - Fax: 24018983
E-mail: elafifi@elafificonsultant.com

٢٢ج عمارات العبور - المرحلة الثانية
شارع صلاح سالم - الدور الأول
ت: ٢٤٠٣٣٤٧٧ - ٢٤٠٣٠٩٣٠ - ٢٢٦٣٧٦٢٣ (٠٢٠٢)
موبايل: ٦٦٨٨١٣٩ (٠١٠٠) فاكس: ٢٤٠١٨٩٨٣
www.elafificonsultant.com

Scanned by CamScanner

PROJECT: **Rectification of FA, FF, EL System (Existing)**

Consultant/ Client: AMERICANA QUALITY

Contractor: GENERAL

MATERIAL SUBMITTAL

☐ MATERIAL ☑ EQUIPMENT ☐ OTHER

PURPOSE OF SUBMITTAL: ☑ For Approval ☐ For Construction / Fabrication ☐ FOR INFORMATION

DISCIPLINE: ☐ WET RISER SYSTEM ☑ FIRE ALARM ☐ SPRINKLER SYSTEM ☐ EMERGENCY LIGHTING

☑ New Submittal	Submittal No. No.	Date of Submittal Date: 25/2/2020	Sub-Cont./Manufacturer	REF# FLSA-2020-0486-011
☐ Resubmitted	Prev. Submittal No. No. and Date	Date of Receipt / / 2020	Name and Address	

☐ Information Submitted Attached	☐ Operation & Maintenance Manual	☐ Test Results
☐ Certificates	☐ Spare Parts List	☐ Calculations Report
☐ Technical Brochure	☐ Drawings	☐ Proposals
☐ Manufacture's Data & Specs.	☐ Warranty	☐ Catalogue

MATERIAL / EQUIPMENT — Note : Please use attachment in case items are more than provided space.

Item	Name, No. and Description	Origin	Manufacturer/supplier	Spec Ref.	B.O.Q Ref.	App. Code	Sample
	AVENGERS FIREALARM CONTROL PANEL AND DEVICES	USA	AVENGERS	–	–	–	–

Contractor's Remarks & Exceptions — Reply required by: / / 2020

Exact Quantity in DO, sample tobe provided for inspection.

	Ini.	Sign.
PM		
SITE		
MATER.		
STRUC.		
CIVIL		
ARC.		
MECH.		
ELEC	–	
I.D		
SUB-CO		

Submitted by Contractor: General International
Name & Signature: Khurram Shahzad / Site Engineer
Date: 25/2/2020. K Shazad.

Recvd By Gulf Food Company Americana
Name & Signature:
Date: / /

Consultant's Comments Remarks

As inspection it's approved for these materials depends on the installation area

ACTION

A	Approved As Submitted	For :	Gulf Food Company Americana
B	Approved As Noted Resubmission not required	Name :	Name Abdallah Nabil
C	Approved As Noted Resubmission required	Position:	Position Electrical Engineer
D	Disapproved	Signature:	
E	No Action Taken	Date :	26/2/202

General Information
Name: Khurram
Signature: K Shazad
Date: 26.2.2020.

تاريخ الاعتماد: 2017/10/15 الإشارة: م ط / و ق / 150 -

تاريخ الإنتهاء: 2019/8/2

السادة / شركة أنظمة الخرافي للتجارة والمقاولات المحترمين

تحية طيبة وبعد،،

الموضوع: اعتماد معدات نظام إنذار الحريق

صنع الشركة الأمريكية Avenger Systems انتاج أمريكيا - بريطانيا

بالإشارة الى الموضوع أعلاه، وردا على طلبكم المؤرخ (2017/8/20) وبعد دراسة الكتالوجات الفنية والشهادات المقدمة من مختبر (UL) المعتمد لدى الإدارة العامة للإطفاء وبناء على موافقة لجنة المعدات رقم (2017/11) بتاريخ (2017/10/10)، نود أن نعلمكم بأنه لا مانع لدينا من اعتماد معدات إنذار الحريق صنع الشركة الأمريكية المذكورة حسب البيانات الواردة في الجدول التالي:

No.	ITEMS	MODEL NO.	UL FILE NO.
Supreme Analog Fire Control Panels			
1	Supreme RS-H Analog FACP 1-Loop	AS0810-10	UOJZ.S35689
2	Supreme RS-H FACP 1-Loop w/eNET Network Card	AS0815-10	
3	Supreme RS-H Analog FACP 2-Loop	AS0820-10	
4	Supreme RS-H FACP 2-Loop w/eNET Network Card	AS0825-10	
5	Supreme [H] 2 Loop Panel, Red	AS1420-10	
6	Supreme [H] 2 Loop Panel, Red w/eNET Network Card	AS1425-10	
7	Supreme [H] 4 Loop Panel, Red	AS1440-10	
8	Supreme [H] 4 Loop Panel, Red w/eNET Network Card	AS1445-10	
9	eNET Communications Interface Card	AS1170-00	
10	16 Channel RS485 Serial I/O Interface Card	AS1171-00	
11	eVIEW Serial Annunciator, Red	AS1172-10	UOXX.S35689

الإدارة العامة للإطفاء - قطاع الوقاية

تاريخ الطباعة: 2017/10/15

ص.ب 22228 الصفاة ، الرمز البريدي 13083 الكويت ، هواتف البدالة : 22432111 (خمسة خطوط) - فاكس: 22461330
www.kfsd.gov.kw

الإشارة: م ط / و ق / 150 -

تاريخ الاعتماد: 2017/10/15

تاريخ الإنتهاء: 2019/8/2

No.	ITEMS	MODEL NO.	UL FILE NO.
Addressable Detectors			
1	Addressable Multi Heat detector ROR and FT	AS2010-00	UQGS.S35691
2	Addressable Multisensor Smoke and Heat	AS2012-00	UROX.S35692
3	Addressable Photoelectric smoke detector	AS2011-00	
4	Addressable Detector Base 4"	AS7001-00	
5	Addressable Detector Base 6"	AS7002-00	
6	Addressable Sounder Base for Detectors	AS7008-00	
7	Analog Addressable Duct Detector (H)	AS5013-00	
8	Analog Addressable Duct Detector w/Relays (H)	AS5014-00	
Addressable Modules			
1	Monitor module (Input module)	AS6024-00	UOXX.S35689
2	Dual Input Module (H)	AS6007-00	
3	Conventional Zone module	AS6011-00	
4	Fast Response Contact Modules (Class A Wiring)	AS6020-00	
5	Fast Response Contact Modules (Class A Wiring) with short circuit isolator	AS6021-10	
6	Dual Relay Module Low-H (2A @ 30VDC / 0.5A @ 120 VAC)	AS6052-00	
7	Dual Relay Module Low-H W/Isolator (2A @ 30VDC / 0.5A @ 120 VAC)	AS6053-00	
8	Dual Relay Module High -H (8A @ 30VDC / 4.8A @ 250 VAC)	AS6054-00	
9	Dual Relay Module High -H W/Isolator (8A @ 30VDC / 4.8A @ 250 VAC)	AS6055-00	
10	Supervised output module Class A (to control notification devices)	AS6040-00	
11	Supervised output module Class A with isolator (to control notification devices)	AS6041-00	
12	Short circuit isolator module	AS6003-00	
Addressable Manual Pull Station			
1	Addressable Manual Pull Station	AS3031-00	UNIU.S35688
2	Addressable Manual Pull Station, Dual Action w/ Key Lock	AS3029-10	
Audible-signal Appliances			
1	Horns (Indoor/Outdoor)	AS4000-10	ULSZ.S35913
2	Horn/strobes (Indoor)	AS4002-10	
3	Horn/strobes (Indoor/Outdoor)	AS4007-10	
4	Horn/strobes (Indoor)	AS4004-10	

تاريخ الطباعة:2017/10/15

ص.ب 22228 الصفاة ، الرمز البريدي 13083 الكويت ، موقف البيادة : 22432111 (خمسة خطوط) - فاكس: 22461330
www.kfsd.gov.kw

الإشارة: م ط / و ق / 150 -

تاريخ الاعتماد: 2017/10/15

تاريخ الإنتهاء: 2019/8/2

No.	ITEMS	MODEL NO.	UL FILE NO.
Signaling Appliances and Equipment for the Hearing Impaired			
1	Strobe/Horns	AS4004-10	UUKC.S35913
2	Strobe Lights	AS4003-10	

No.	ITEMS	MODEL NO.	UL FILE NO.
Visual-signal Appliances for Fire-protective Signaling Systems			
1	Horn	AS4000-10	UVAV.S35913
2	Horn/Strobe	AS4002-10	
3	Horn/Strobe	AS4007-10	
4	Strobe	AS4001-10	
5	Strobe	AS4006-10	

No.	ITEMS	MODEL NO.	UL FILE NO.
Conventional & Releasing Control Panels			
1	Elite XT Conventional Releasing Panel 230V	AS1810-11	UOJZ.S35689
2	Elite CP Conventional Panel 2 zones 230 VAC	AS1842-11	
3	Elite CP Conventional Panel 4 zones 230 VAC	AS1844-11	
4	Elite CP Conventional Panel 8 zones 230 VAC	AS1848-11	
Releasing Accessories			
1	Elite XT Abort Switch Surface Mount	AS1823-10	UOXX.S35689
2	Elite XT Extinguishant Disablement Switch	AS1832-10	
Conventional Detectors			
1	Conventional Photo Electric Smoke - H	AS2032-00	UROX.S35692
2	Conventional Photo Electric Smoke & Heat - H	AS2041-00	
3	Conventional Heat Sensor 190° F (H)	AS2021-00	UQGS.S35691
4	Conventional Heat Sensor 135° F (H)	AS2020-00	
5	Conventional 4" base - H	AS2050-00	
6	Conventional 6" base – H	AS2051-00	

تاريخ الطباعة: 2017/10/15

ص.ب 22228 الصفاة ، الرمز البريدي 13083 الكويت ، هاتف مباشر : 22432111 (خمسة خطوط) – فاكس: 22461330
www.kfsd.gov.kw

تاريخ الاعتماد: 2017/10/15 الإشارة: م ط / و ق / 150 -

تاريخ الإنتهاء: 2019/8/2

No.	ITEMS	MODEL NO.	UL FILE NO.
Conventional Detectors			
1	Conventional Pull Station - Single Action	AS3036-10	UNIU.S35688
2	Conventional Pull Station - Single Action (SG-42SK1)	AS3037-10	
3	Conventional Pull Station - Dual Action (SG-42SK2)	AS3038-10	

شريطة التقيد بجميع قوانين ومواصفات الإدارة العامة للإطفاء الخاصة بتجارة وصيانة معدات وأنظمة الإنذار والمكافحة وتوفير الغيار وعمل الصيانة اللازمة لها، حيث يجب توفير اسم وموديل المعدة وأيضا اسم وشعار المختبر ورقم التسجيل على المعدة، وتقديم الكتالوجات الفنية للدراسة والاعتماد لكل مشروع على حده قبل التنفيذ على أن يتم تنفيذ هذه المواد من قبل الجهاز الفني المعتمد.

وتفضلوا بقبول فائق الاحترام والتقدير ،،،

نائب المدير العام لشؤون قطاع الوقاية

م/ بدافي جمعة الياسين
مدير إدارة وقاية محافظة العاصمة

الإدارة العامة للإطفاء
قطاع الوقاية

تاريخ الطباعة:2017/10/15

ص.ب 22228 الصفاة ، الرمز البريدي 13083 الكويت ، هواتف البدالة : 22432111 (خمسة خطوط) - فاكس: 22461330
www.kfsd.gov.kw

කොළඹ මහා නගර සභාව / கொழும்பு மாநகர சபை / Colombo Municipal Council

ගිනි නිවීම් සේවා දෙපාර්තමේන්තුව
தீயணைக்கும் சேவை திணைக்களம்
FIRE SERVICE DEPARTMENT

ටී. බී. ජයා මාවත, කොළඹ 10. / ரீ. பீ. ஜயா மாவத்தை, கொழும்பு 10. / T. B. Jayah Mawatha, Colombo 10.
දුරකථන / தொலைபேசி / Telephone : 011-2686087 ෆැක්ස් / பெக்ஸ் / Fax : 011-2692222

හදිසි අංකයම் / அவசர தொலைபேசி / Emergency Numbers: 110, 2422222-3, 4222222
වෙබ් අඩවිය / வெப் / Web: www.cmc.lk
විද්‍යුත් තැපෑල / மின்னஞ்சல் / E-mail: cmcfireservice@sltnet.lk

FB/APL/FPE/CP/ACC/47/22

October 27, 2022

The Director,
Proneat Holdings (Pvt) Ltd
No 128, Temple Road,
Maradana,
Colmobo 10.

Dear Sir,

APPROVAL FOR AVENGER CONTROL PANELS AND ACCESSORIES FOR WATERFRONT INTEGRATED RESORT PROJECT, COLOMBO

This refers to your letter dated 24th October 2022 and the Technical Data furnished to this department.

S/N	Item Description	Model	Approvals/ Standards
Addressable Control Panels, Modules & Other Accessories			
1	1 Loop Addressable Control Panel (SUPREME-RS)	AS0810-XX	UL
2	2 Loop Addressable Control Panel (SUPREME-RS)	AS0820-XX	
3	2-16 Loop Addressable Control Panel (OASIS)	OA 103 H#	UL, FM
4	Modules & Other Accessories.		UL
Addressable Detectors			
5	Heat Detector.	AS2010-00	UL
6	Smoke Detector.	AS2011-00	UL
7	Multi Criteria Detector Smoke/Heat.	AS2012-00	UL
8	Multi Criteria Detector – Smoke/Heat/CO/COHB.	AS2014-00	UL

This department has no objection in installing above Avenger products for Essential Fan Control Systems, Gas Detection Systems, Fire Detection and Alarm Systems of the said project.

Thanking You

Yours Faithfully

28/10/2022

H.W.W. KULARATNE
DIVISIONAL FIRE OFFICER
FOR CHIEF FIRE OFFICER

H.W.Wimal Kularatne
Divisional Fire Officer
(Fire Prevention) G. I. Fire Eng.
Fire Service Department
T. B. Jayah Mawatha, Colombo 10.

List Of Projects

Avenger Systems has successfully delivered Fire Detection and Suppression Solutions across prestigious hospitality venues, international airports, major shopping malls, and high-end developments across the globe, reinforcing its position as a trusted partner for premium projects.

List of Projects

- New Facility – Behn Meyer VSIP (Vietnam)
- Hyatt Palace Ha Long Bay Hotel (Vietnam)
- HIIVE Hotel VSIP 1 (Vietnam)
- HIIVE Hotel VSIP 2 (Vietnam)
- Sky 89 (Vietnam)
- River Panorama (Vietnam)
- Tra Vinh General Hospital (Vietnam)
- Ixora Ho Tram Resort (Vietnam)
- Phin Factory – Nestlé Vietnam (Vietnam)
- Zahra Towers – Ministry of Interior (Egypt)
- 10th of Ramadan Prison (Egypt)
- Director of Security – New Alamein City (Egypt)
- Marsa Mares Hotel – Marsa Alam (Egypt)
- Sakhra Hotel – Marsa Matruh (Egypt)
- Police Mosque – 6th October City (Egypt)
- Engineering Faculty – Mansoura University (Egypt)

List of Projects

- Water Treatment Plant – Al-Raysa, Al-Arish (Egypt)
- Fresh Showrooms – Gesr El-Swiss / Shobra / Al-Obour (Egypt)
- Smart LED Fresh Factory – 10th of Ramadan (Egypt)
- EMPE Head Office – 5th Settlement (Egypt)
- Development Center – Educational Complex, 6th October (Egypt)
- Agora Mall – 5th Settlement (Egypt)
- Amok Company – Alexandria (Egypt)
- Al Furat Alex West Company (Egypt)
- Mina Pharm – 10th of Ramadan (Egypt)
- Toshka Power Station – Aswan (Egypt)
- Qaws Water Station – Qena (Egypt)
- Palm Hills Mall – October (Egypt)
- Asna Traffic Unit – Ministry of Interior (Egypt)
- Mashiakhet Al-Azhar – Asyut (Egypt)
- Civil Registration – Mansoura (Egypt)
- El Amar Foam Factory – Abu Rawash (Egypt)
- Utopia Beach Club Hotel – Marsa Alam (Egypt)

List of Projects

- Residential Compound Phase 1 – Bu Sidra (Qatar)
- Residential Building (2B+G+10F) – Lusail (Qatar)
- Office Building FV9 (2B+G+5F) – Lusail (Qatar)
- Office Building (B+G+3) – Al Sadd (Qatar)
- Workshop & Office Building (G+2) – Industrial Area (Qatar)
- Farmhouse Villa Project (Qatar)
- Al Dar Exchange – Safari Mall Al Khor (Qatar)
- Gulf Exchange – Al Ruwais (Qatar)
- Abu Sedra Compound (Qatar)
- C4 Compound (Qatar)
- Entertainment City FV-09 (Qatar)
- Villa Project (G+1) (Qatar)K-Electric – Maymar Grid
  (Pakistan)
- Silicon Technologies – IBA Karachi (Pakistan)
- Silliman University (Philippines)
- Hotel Essencia (Philippines)

List of Projects

- Olaya Lifestyle Retail – Riyadh (Saudi Arabia)
- Avance Learning School – Riyadh (Saudi Arabia)
- Al Bassateen Office – Riyadh (Saudi Arabia)
- King Faisal Specialist Hospital – Riyadh (Saudi Arabia)
  National Water Company – Environmental Services Station, Riyadh (Saudi Arabia)
- Saudi Telecom Company (TAWAL) – Riyadh (Saudi Arabia)
- University of Tabuk – College of Science, Tabuk (Saudi Arabia)
- General Hospital – Hail (Saudi Arabia)
- Al Magarda Hospital – Aseer (Saudi Arabia)
- Ministry of Culture – Head Office, Riyadh (Saudi Arabia)
- Ministry of Defense – Supporting Building, Riyadh (Saudi Arabia)
- Ministry of Justice – Security Requirements, Riyadh (Saudi Arabia)
- NUPCO Medicine Warehouse – Dammam (Saudi Arabia)
- NUPCO Medicine Warehouse – Al Jouf (Saudi Arabia)
- Ministry of Sport – King Fahd Sports City Development, Taif (Saudi Arabia)
- General Authority of Roads – Riyadh (Saudi Arabia)

List of Projects

- Royal Saudi Air Force – Radar Station, Northern Sector (Saudi Arabia)
- National Bank Archives – Al Kharj (Saudi Arabia)
- SRJ Sports Investment Company – KFAD, Riyadh (Saudi Arabia)
- Safira RAK Fabrication Yard – Ras Al Khobar (Saudi Arabia)
- Royal Commission – Film Crew Lodge Phase 2 & 3, Al Ula (Saudi Arabia)
- National Guard Hospital – King Abdulaziz Medical City, Riyadh (Saudi Arabia)
- Riyadh Metro Project – Riyadh (Saudi Arabia)
- Ritz Carlton Hotel – DIFC, Dubai (UAE)
- Kempinski Hotel – Palm Jumeirah, Dubai (UAE)
- Radisson Blu Hotel – Business Bay, Dubai (UAE)
- Aloft Hotel – Dubai (UAE)
- Westin 5-Star Hotel – Dubai (UAE)
- Viceroy Hotel – Dubai (UAE)
- Park Hyatt Hotel – Dubai (UAE)
- Queen Elizabeth 2 (QE2) Ship Kitchen – Dubai (UAE)
- Mina Al Fajer Resort – Fujairah (UAE)

List of Projects

- Dubai Mall – Multiple Restaurants Projects (UAE)
- Mall of Emirates – Multiple Projects (UAE)
- Nakheel Mall – Vox Cinema, Palm Jumeirah (UAE)
- Ibn Battuta Mall – Multiple Projects (UAE)
- City Walk – Dubai (UAE)
- La Mer Waterfront – Multiple Projects (UAE)
- Dubai Parks & Resorts – Riverland (UAE)
- Dubai International Airport – Terminal 3 (UAE)
- Emirates Flight Catering – Central Kitchen (UAE)
- Air Arabia Flight Catering – Sharjah (UAE)
- Al Naboodah Staff Accommodation – Central Kitchen, Jebel Ali (UAE)
- Deliveroo Central Kitchen – Phase 1, Dubai (UAE)
- VOX Cinema – Nakheel Mall, Palm Jumeirah (UAE)
- Reel Cinema – Jebel Ali, Dubai (UAE)
- Sharjah Cooperative Society – Kalba & Nakhilat (UAE)

List of Projects

- School AL Ameed Babil (Iraq)
- Sidr Farm (Iraq)
- Al-Ameed International Center for Research and Studies (Iraq)
- Sheikh Al-Kulaini Complex (Iraq)
- Al Kout Cinema – Fahaheel (Kuwait)
- Mill Tower – Salmiya (Kuwait)
- Om Kolthoum School – Al Salam (Kuwait)
- Abdullah Khalaf Aldihany School – Al Zahraa (Kuwait)
- Fatima Al Saraoui School – Al Salam (Kuwait)
- Alia International Hospital (Kuwait)
- Kuwait International Bank – Hawally (Kuwait)
- Public Authority of Housing Welfare (Kuwait)
- Starlight sweater Ltd. (Bangladesh)
- Stark Bag Industries Ltd. (Bangladesh)
- Dhaka Wasa (Bangladesh)
- Euro Spinning Ltd. (Bangladesh)
- IHM Garments & Textile Co, LTD (Bangladesh)
- Dispatch Terminal of CDPL Project Under 24 ECB
  (Bangladesh)

وزارة التجارة
Ministry of Commerce

VISION رؤية 2030
المملكة العربية السعودية
KINGDOM OF SAUDI ARABIA

شركة فالكون بلور العالمية لاجهزة السلامة

السجل التجاري: 4030500427

رمزك التجاري QR Code

من خلاله يمكنك التحقق المباشر من العلومات:

- السجل التجاري
- رخصة البلدية
- شهادة السعودة
- برنامج نطاقات
- شهادة الزكاة
- الغرفة التجارية

وزارة التجارة
Ministry of Commerce

شهادة تسجيل الشركة
Company Registration Certificate

الرقم الموحد : ٧٠٣٣٧٤١٠٠٥
رقم المنشأة : ٤٠٣٠٥٠٠٤٢٧
التاريـــــخ : ١٤٤٤/٠٧/١٤ هـ

الاسم التجاري للشركة : شركة فالكون باور العالمية لاجهزة السلامة

نوعها : ذات مسئولية محدودة — جنسيتها : ســـعودى

مدة الشركة : ٩٩ سنة — تبدا من : ١٤٤٤/٠٧/١٤ هـ — وتنتهي في : ١٥٤٣/٠٧/١٥ هـ

مركزها الرئيسي : ٠٠٠٠٠ ، ٠٠٠٠

هاتف : ٠٠٠٠٠٠٠٠٠٠ — الرمز البريدي : ٠٠٠٠٠ — ص. ب :

النشاط : للاطلاع على بيانات الأنشطة الرجاء مسح الرمز التجاري — ملكية الشركة : سعودية

رأس المال : ٢٧,٠٠٠,٠٠٠ ريال سعودي

المديرون : 1 منصور حسن محمد حسن — 2

3 — 4

5 — 6

7 — 8

9 — 10

11 — 12

13 — 14

15 — 16

سلطات المدير/المديرون : حسب ما نص عليه عقد الشركة

يشهد مكتب السجل التجاري بمدينة : جدة — بأنه تم تسجيل الشركة المذكورة أعلاه بمدينة : جدة

وتنتهي صلاحية الشهادات في : ١٤٤٦/٠٧/٢٦ هـ — بموجب الإيصال رقم : ٢٤١٠٣٣٥٢٢٩٦٩ — وتاريخ : ١٤٤٦/٠٤/٢٠ هـ

وزارة التجارة
Ministry of Commerce

المركز السعودي للأعمال
Saudi Business Center

رؤية VISION 2030
المملكة العربية السعودية
KINGDOM OF SAUDI ARABIA

السادة / شركة فالكون باور العالمية لاجهزة السلامة

نسأل الله أن يكتب لكم التوفيق والنجاح في عملكم التجاري وأن تكونوا شريكًا في تعزيز اقتصاد المملكة العربية السعودية.

يسرنا إبلاغكم بأن رقم منشأتكم الموحد هو

٧٠٣٣٧٤١٠٠٥

وقد تم ربطه بالخدمات الحكومية التالية..

وزارة التجارة Ministry of Commerce	رقم منشأتك: ٤٠٣٠٥٠٠٤٢٧
المؤسسة العامة للتأمينات الاجتماعية General Organization for Social Insurance	رقم منشأتك: ٦٣٨٧٦٣٣٣٨
الموارد البشرية والتنمية الاجتماعية	رقم منشأتك: ٢١٤٠٠٥٤-٩
اتحاد الغرف السعودية Federation of Saudi Chambers	رقم منشأتك: ٤٨١٨٧٩
سبل SPL	رقم منشأتك: ٢١٠٢٣٠٩٣٢٠٢
بلدي balady	رقم منشأتك: لايوجد
هيئة الزكاة والضريبة والجمارك Zakat, Tax and Customs Authority	رقم منشأتك: تحت الاجراء

للاستفادة من الخدمات المقدمة من الجهات الحكومية

دليل التاجر

100231073130625

تاريخ الإصدار: 2023/02/08
الرقم المميز: 3115506404

الهيئة العامة للزكاة والدخل
General Authority of Zakat & Tax

ضريبة القيمة المضافة
VAT

شهادة تسجيل في ضريبة القيمة المضافة
VAT Registration Certificate

تشهد الهيئة العامة للزكاة والدخل بأن المكلف أدناه مسجل في ضريبة القيمة المضافة بتاريخ 2023/02/08

Hereby, The General Authority of Zakat & Tax (GAZT) certifies that the taxpayer below is VAT registered on 08/02/2023

Taxpayer Name:	شركة فالكون باور العالمية لاجهزة السلامة	**اسم المكلف:**
VAT Registration Number:	311550640400003	**رقم التسجيل الضريبي:**
Effective Registration Date:	2023/03/01	**تاريخ نفاذ التسجيل:**
Taxpayer Address:	جدة،الرحاب،شارع الامير متعب ،23451	**عنوان المكلف:**

كمكلف مسجل في ضريبة القيمة المضافة، لا يجوز لك تحصيل ضريبة القيمة المضافة من عملائك قبل تاريخ نفاذ التسجيل بالضريبة. في حال تبين غير ذلك، ستقوم الهيئة العامة للزكاة والدخل بتنفيذ الغرامات المستحقة

هذه الوثيقة مرسلة من النظام الآلي ولا تحتاج إلى توقيع

– الهيئة العامة للزكاة والدخل –

100231073130625

تاريخ الإصدار: 2023/02/08

الرقم المميز: 3115506404

الهيئة العامة للزكاة والدخل

General Authority of Zakat & Tax

ضريبة القيمة المضافة

VAT

Taxpayer Name:	شركة فالكون باور العالمية لاجهزة السلامة	**اسم المكلف:**
CR / License / Contract No.:	4030500427	**رقم السجل/الرخصة/العقد:**
Tax Period:	ربع سنوي-Quarterly	**الفترة الضريبية:**
First Filing due date:	2023/04/30	**تاريخ استحقاق أول إقرار ضريبي:**

كمكلف مسجل في ضريبة القيمة المضافة، لا يجوز لك تحصيل ضريبة القيمة المضافة من عملائك قبل تاريخ نفاذ التسجيل بالضريبة. في حال تبين غير ذلك، ستقوم الهيئة العامة للزكاة والدخل بتنفيذ الغرامات المستحقة

هذه الوثيقة مرسلة من النظام الآلي ولا تحتاج إلى توقيع

- الهيئة العامة للزكاة والدخل -

العنوان الوطني
NATIONAL ADDRESS

Proof Number	1051349559	رقم الإثبات
Original Date	24/6/2024	تاريخ الإصدار
Expiration Date	21/12/2024	تاريخ الانتهاء

إثبات عنوان
Address Proof

Address Holder Details — بيانات صاحب العنوان

Name		شركة فالكون باور العالمية لاجهزة السلامة	الاسم
Customer Acc.	3 1 3 2 6 2 2 4 7 7 2	رقم الحساب
Reg. Date	24/6/2024	تاريخ التسجيل

Address Details — تفاصيل العنوان

Short Address	J C M B 2 9 9 2	العنوان المختصر
Building No.	2 9 9 2	رقم المبنى
Street	Falasteen	الشارع	فلسطين
Secondary No.	6 1 1 2	الرقم الفرعي
District	Mishrifah Dist.	الحي	حي مشرفة
Postal Code	2 3 3 4 1	الرمزي البريدي
City	JEDDAH	المدينة	جدة
	Kingdom of Saudi Arabia	المملكة العربية السعودية

To Verify للتحقق
https://proof.address.gov.sa/VerifyProofNA.aspx

تم إصدار هذا الإثبات إلكترونيا ولا يتطلب التوقيع عليه

تم إصدار هذا الإثبات بناء على طلب الموضح أعلاه، ويحظر قطعيا تقليده أو إدخال أي تعديلات عليه سواء بالإضافة أو الحذف، ويعد الإثبات لاغيا إذا شابه شيء من ذلك، كما يعرض صاحبه للمساءلةالقانونية.

This proof has been issued electronically and does not require a signature

This proof has been issued upon the request of the above-named, and it is absolutely prohibited to imitate it or make any modifications to it, whether by addition or deletion, and the proof is considered void if it is marred by something, and its owner is subject to legal accountability.